# Operation Management & Strategic Management

## Suggested Answers

## Compilation

**By**

**Budding CMA**

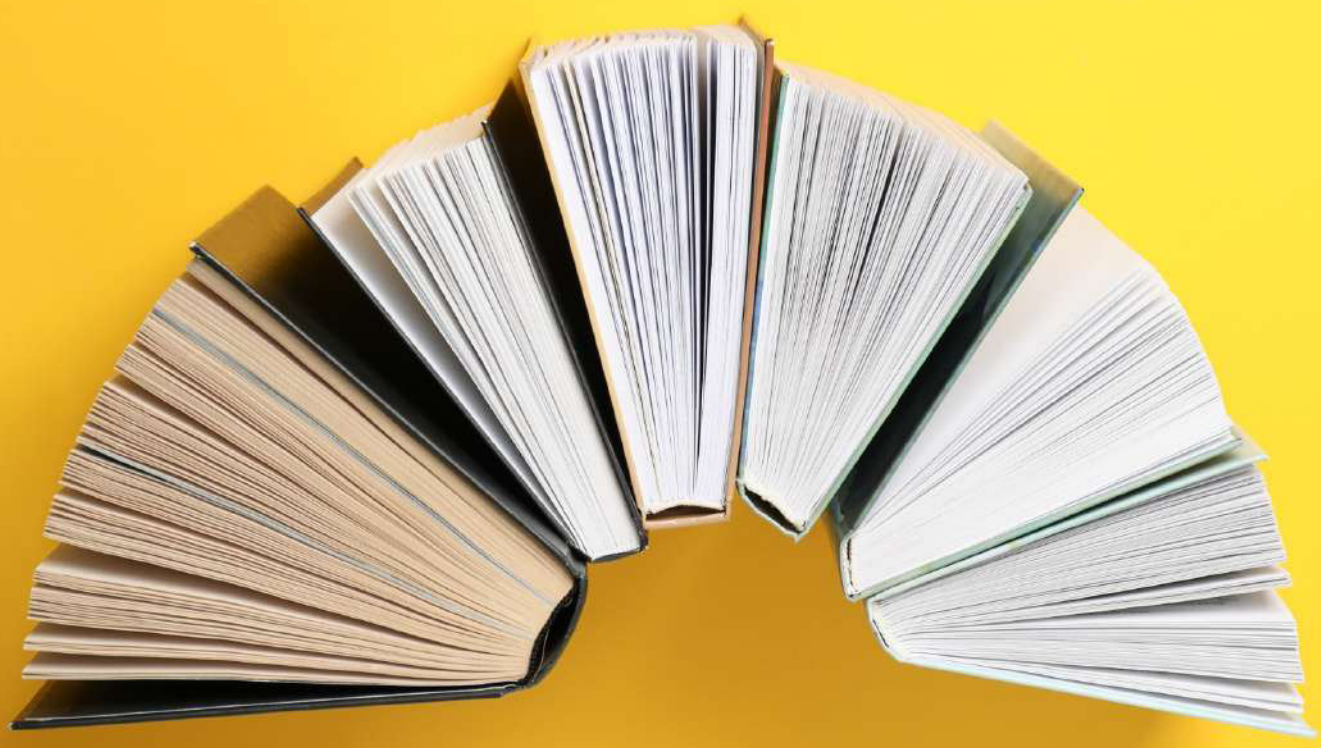

www.buddingcma.in

# Support us by
# checking out our social handles

*Visit our website:* https://www.buddingcma.in

[Kindly register to get all the updates instantly]

*Following on Instagram:*

Account Name: BUDDING_CMA.POSITIVITY

https://instagram.com/budding_cma.positivity?igshid=3d0y3ravpjey

*Join us on Telegram:*

Channel Name: Budding CMA

https://t.me/buddingcma

Thank you for all the SUPPORT

# Index


| Sl. No. | Exam Term | Pg.no. |
|---|---|---|
| 1 | June 2017 | 1 |
| 2 | December 2017 | 10 |
| 3 | June 2018 | 20 |
| 4 | December 2018 | 33 |
| 5 | June 2019 | 47 |
| 6 | December 2019 | 66 |


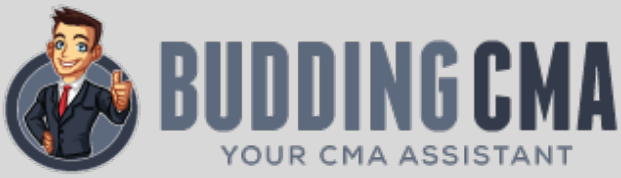

# INTERMEDIATE EXAMINATION
## GROUP - III
## (SYLLABUS 2016)

## SUGGESTED ANSWERS TO QUESTIONS

## JUNE - 2017

### Paper-9 : OPERATIONS MANAGEMENT AND STRATEGIC MANAGEMENTINDIRECT

**Time Allowed : 3 Hours** **Full Marks : 100**

**This paper contains two Sections.**
**Both Sections are compulsory, subject to instructions provided against each.**
**This figures in the margin on the right side indicate full marks.**
**All working must form part of your answer.**
**Assumptions, if any, must be clearly indicated.**

## Section - A
**(Operations Management)**

**1. (a) Choose the correct answer: 1x10=10**

**(i) Out of the following trends in production/operations management, which one is sometimes called as agile manufacturing?**
- **(A) Re-engineering**
- **(B) Supply-Chain Management**
- **(C) Lean Production**
- **(D) Flexibility**

**(ii) Out of the following factors that are affecting Capacity Planning, which one is Less Controllable one?**
- **(A) Machine break-downs**
- **(B) Amount of labour employed**
- **(C) Facilities installed**
- **(D) Shifts of work per day**

**(iii) Which of the following stages of Product Life Cycle does attribute beginning of substantial increase in Sales and Profits?**
- **(A) Introduction**
- **(B) Growth**
- **(C) Maturity**
- **(D) Decline**

**(iv) This aims at finding the best and most efficient way of using the available resources - men, materials, money and machinery:**
- **(A) Time Study**
- **(B) Work Study**
- **(C) Method Study**
- **(D) Job Evaluation**

**(v) Which one is NOT an index of Productivity?**
- **(A) Man-hour output**
- **(B) Productivity ratio**
- **(C) TQM**
- **(D) Use of Financial Ratios**

**(vi) The time by which an activity can be rescheduled without affecting the other activities - preceding or succeeding is called as**
- **(A) Slack**
- **(B) Independent Float**
- **(C) Free Float**
- **(D) Total Float**

**(vii) Reliability and per unit cost of which of the following spares are less?**
- **(A) Regular spares**
- **(B) Insurance spares**
- **(C) Capital spares**
- **(D) Rotable spares**

**(viii) For a marketing manager, the sales forecast is**
- **(A) estimate of the amount of unit sales for a specified future period.**
- **(B) arranging the salesmen to different segments of the market.**
- **(C) to distribute the goods through transport to satisfy the market demand.**
- **(D) to plan the sales methods.**

**(ix) The activity of specifying when to start the job and when to end the job is known as**
- **(A) Planning**
- **(B) Scheduling**
- **(C) Timing**
- **(D) Follow-up**

**(x) The lead time is**
- **(A) Time for placeholders for materials**
- **(B) Time of receiving materials**
- **(C) Time between receipt of material and using materials**
- **(D) Time between placing the order and receiving the materials**

**(b) Match Column-I with Column-II: 1×6=6**

| I | | II |
|---|---|---|
| (A) Aviation Fuel | (i) | Value Analysis |
| (B) Brainstorming | (ii) | Machine Shop |
| (C) Forgings | (iii) | Turbo-Alternator |
| (D) Tools | (iv) | Refinery |
| (E) Hydro-electricity | (v) | Job Evaluation |
| (F) Ranking Method | (vi) | Smithy |

**(c) State whether the following statements are 'True' or 'False': 1×6=6**
- **(i) Merit Rating is used to determine the cost of a product.**
- **(ii) Project costs increase as the duration of the project increases.**
- **(iii) In carrying out Job Evaluation studies, point system is the best method.**
- **(iv) Production planning and control is essentially concerned with the control of Finished goods.**
- **(v) A Productivity Index is a device of expressing the ratio between outputs and the inputs of the resources numerically.**
- **(vi) If the total float value is zero, it means the resources are just sufficient to complete the activity without delay.**

**Answer:**

**1. (a)**

| | | |
|---|---|---|
| (i) | (d) | Flexibility |
| (ii) | (a) | Machine break-downs |
| (iii) | (b) | Growth |
| (iv) | (b) | Work Study |
| (v) | (c) | TQM |

(vi) (b) Independent Float.
(vii) (a) Regular Spares.
(viii) (a) Estimate of the amount of unit sales for a specified future period.
(ix) (b) Scheduling.
(x) (d) Time between placing the order and receiving the materials.

**(b)**

| I | | II |
|---|---|---|
| (A) Aviation Fuel | (iv) | Refinery |
| (B) Brainstorming | (i) | Value Analysis |
| (C) Forgings | (vi) | Smithy |
| (D) Tools | (ii) | Machine Shop |
| (E) Hydro-electricity | (iii) | Turbo-Alternator |
| (F) Ranking Method | (v) | Job Evaluation |

**(c)** (i) False
(ii) True
(iii) True
(iv) False
(v) True
(vi) True

**2. Answer any three questions from the following: 16×3=48**

**(a) 'An important objective of Operations Management is Resource Utilization.' Enumerate. Also list the scope of Operations Management. 3+3=6**

**(b) Briefly explain various methods of sales forecasting. 10**

**Answer:**

**2. (a)** A major objective of Operations Management is to utilize resources for the satisfaction of customer wants effectively, i.e., customer service must be provided with the achievement of effective operations through efficient use of resources. Inefficient use of resources or inadequate customer service leads to commercial failure of an operating system. Operations management is concerned essentially with the utilization of resources, i.e., obtaining maximum effect from resources or minimizing their loss, underutilization or waste. The extent of the utilization of the resources' potential might be expressed in terms of the proportion of available time used or occupied, space utilization, levels of activity, etc. Each measure indicates the extent to which the potential or capacity of such resources is utilized. This is referred to as the objective of resource utilization.

The following are the scope of Operation Management:
1. Location of facilities.
2. Plant layouts and Material Handling.
3. Product Design.
4. Process Design.
5. Production and Planning Control.
6. Quality Control.
7. Materials Management.
8. Maintenance Management

**(b)** (1) Survey of buyer's inventions or the user's expectation method:
(2) Collective opinion or sales force composite method:
(3) Group executive judgment or executive judgment method:
(4) Experts' opinions:

(5) Market test method:
(6) Trend projection method:

**3. (a) Discuss the term 'Process Strategy'. What does it involve? 3+3=6**

**(b) Calculate the standard time per article produced from the following data obtained by a work sampling study: 10**
**Total no. of observations = 2,600**
**No. of working observations = 2,000**
**No. of units produced in 100 hours duration = 5,000 numbers**
**Proportion of manual labour = ¾**
**Proportion of machine time = ¼**
**Observed rating factor = 120%**
**Total allowances =15% of normal time**

**Answer:**

**3. (a)** A process strategy is an organisation's approach to process selection for the purpose of transforming resource inputs into goods and services (outputs). The objective of a process strategy is to find a way to produce goods and services that meet customer requirement and product specification (i.e., design specifications) within the constraints of cost and other managerial limitations. The process selected will have a long-term effect on efficiency and production as well as flexibility, cost, and quality of the goods produced. Hence it is necessary that a firm has a sound process strategy at the time of selecting the process.

Key aspects in process strategy include:
(i) **Make or buy decisions** - It refers to the extent to which a firm will produce goods or provide services in-house or go for outsourcing (buying or subcontracting).
(ii) **Capital intensity** - It refers to the mix of equipment and labour which will be used by the firm.
(iii) **Process flexibility** - This refers to the degree to which the system can be adjusted to changes in processing requirements due to such factors as changes in product or service design, changes in volume of products produced and changes in technology.

**(b)** (1) Actual working time in the duration of 100 hours = 100×(2,000/2,600) = 76.923 hours
(2) Time taken per article = (76.923×60)/5,000 = 0.923 minute
(3) Observed manual labour time per article = 0.923×(3/4) = 0.6922 minute
(4) Observed machine time per article = 0.923×(1/4) = 0.230 minute
(5) Normal labour time per unit = Observed time/unit × Rating factor = 0.6922×1.20 = 0.8306 minute
(6) Standard labour time per unit = 0.8306+(15/100)×0.8306 = 0.9552 minute
(7) Standard time per unit of article produced = 0.9552 + 0.230 =1.185 minutes.

**4. (a) A Bakery shop sells bakery items. Past data of demand per week in hundred kilograms with frequency is given below:**

| Demand/Week | 0 | 6 | 12 | 18 | 24 | 30 |
|---|---|---|---|---|---|---|
| Frequency | 1 | 12 | 19 | 8 | 6 | 4 |

**Using the following sequence of random numbers, generate the demand for the next 10 weeks. Also find out the average demand per week. 10**

| Random numbers | 12 | 27 | 18 | 58 | 43 | 75 | 31 |
|---|---|---|---|---|---|---|---|
| | 62 | 47 | 35 | 53 | 42 | 68 | 71 |

**(b) An incentive scheme allows proportionate production bonus beyond 100% performance level.**
**Calculate the amount of**

**(i) Incentive bonus and**

**(ii) Total payment received by an operator on a particular day during which the following particulars apply:**

**Operation : Assembling a table clock set**
**Work Content : 40 Standard minutes per assembled set**
**Attended Time: 8 Hours**
**Time spent on unmeasured work : 3 Hours**
**Number of sets assembled during the day : 10**
**Wage rate : ₹ 5 per hour**

**(iii) What is the net labour productivity achieved by the operator during the day?**

**2×3=6**

**Answer:**

**4. (a)**

| Random No. Range Table for Demand | | | | |
|---|---|---|---|---|
| Demand per week | Frequency | Probability | Cumulative Probability | Range |
| 0 | 1 | 0.02 | 0.02 | 0-1 |
| 6 | 12 | 0.24 | 0.26 | 2-25 |
| 12 | 19 | 0.38 | 0.64 | 26-63 |
| 18 | 8 | 0.16 | 0.80 | 64-79 |
| 24 | 6 | 0.12 | 0.92 | 80-91 |
| 30 | 4 | 0.08 | 1.00 | 92-99 |
| | Σf = 50 | 1.00 | | |

| Simulated values for next 10 weeks | | |
|---|---|---|
| Weeks | R. Nos. | Demand |
| 1 | 12 | 6 |
| 2 | 27 | 12 |
| 3 | 18 | 6 |
| 4 | 58 | 12 |
| 5 | 43 | 12 |
| 6 | 75 | 18 |
| 7 | 31 | 12 |
| 8 | 62 | 12 |
| 9 | 47 | 12 |
| 10 | 35 | 12 |
| | | Total: 114 |

Average Weekly demand =114/10= 11.4

**(b)** Total standard minutes worked during the day = 40×10 = 400, working time = 8-3 = 5 hours = 300 minutes.
Performance = (400×100)/300 = 133.34% or 0.3333

(i) Incentive bonus = 0.3333×5×5= ₹ 8.33 for five hours on measured work
(ii) Guaranteed wage for 8 hours = 8×5 = ₹ 40;
Total earnings for the day = ₹ (8.33+40) = ₹ 48.33
(iii) Net labour productivity = Output in units/Net person hours =10/5 = 2 sets per hour.

**5. (a) A project consists of eleven activities A, B, C, D, E, F, G, H, I, J and K. The relationship among various activities is as follows:**

| Activity | Preceding Activity |
|---|---|
| **A** | **—** |
| **B** | **A** |
| **C** | **A** |

| | |
|---|---|
| **D** | **B** |
| **E** | **C** |
| **F** | **D,E** |
| **G** | **F** |
| **H** | **F** |
| **I** | **G** |
| **J** | **I,H** |
| **K** | **J** |

**Draw the network diagram.** **6**

**(b) Product A has a Mean Time Between Failures (MTBF) of 35 hours and a Mean Time to Repairs (MTTR) of 6 hours. Product B has a MTBF of 45 hours, and has a MTTR of 3 hours.**
**(i) Which product has higher reliability?**
**(ii) Which product has greater maintainability?**
**(iii) Which product has greater availability?** **3+3+4=10**

**Answer:**

**5. (a)** The relationships among various activities is as follows:

| Activity | Preceding Activity |
|---|---|
| A | - |
| B | A |
| C | A |
| D | B |
| E | C |
| F | D,E |
| G | F |
| H | F |
| I | G |
| J | I,H |
| K | J |

The network diagram:

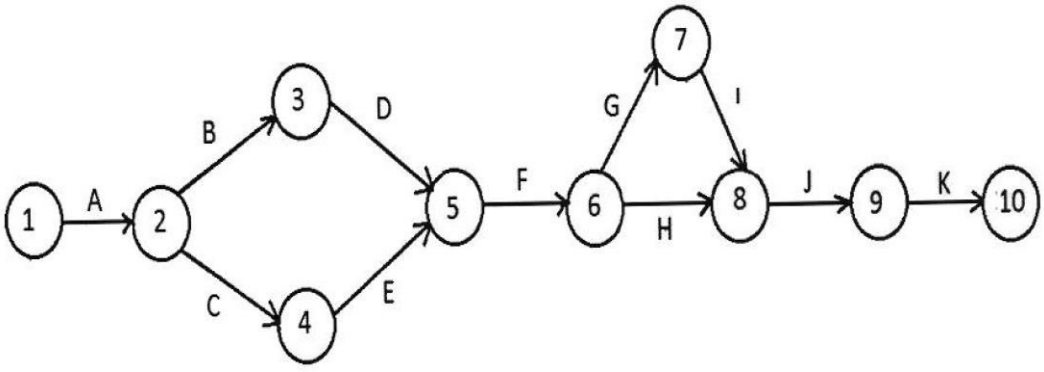


**(b)** (i) Product B, with the higher MTBF (i.e. 45 hours) than product A (i.e. 35 hours), is more reliable since it has lesser chances for failure during servicing.
(ii) The MTTR means time taken to repair a machine. Thus lesser MTTR (of 3 hours) pertaining to Product B vis-a-vis of 6 hrs of Product A makes Product B to have greater maintainability.
(iii) Availability of a machine/product = MTBF/(MTBF+MTTR)

Thus Availability of Product A = 35/(35+6) = 35/41 = 85.366%
Availability of Product B = 45/(45+3)=45/48 = 93.75%
Hence, Product B has more availability.

## Section - B
**(Strategic Management)**

**6. Choose the correct answer: 1×6=6**

**(i) Benchmarking is**
- **(A) the analytical tool to identify high cost activities based on the 'Pareto Analysis'.**
- **(B) the search for industries best practices that lead to superior performance.**
- **(C) the simulation of cost reduction schemes that helps to build commitment and improvement of actions.**
- **(D) the process of marketing and redesigning the way a typical company works.**
- **(E) the framework that earmarks a linkage with suppliers and customers.**

**(ii) Successful differentiation strategy allows the company to**
- **(A) gain buyer loyalty to its brands.**
- **(B) charge too high a price premium.**
- **(C) depend only on intrinsic product attributes.**
- **(D) have product quality that exceeds buyers' needs.**
- **(E) segment a market into distinct group of buyers.**

**(iii) The essential ingredients of Business Process Re-engineering (BPR) are**
- **(A) continuous improvements of products, processes and technologies.**
- **(B) planning for the technologies, processes and strategic partnerships etc.**
- **(C) fundamental re-thinking and radical redesign of business process to achieve dramatic results.**
- **(D) generation, comparison and evolution of many ideas to find one worthy of development.**
- **(E) identification and selection of lay-outs most suited for products and processes.**

**(iv) Marketing Research Studies are undertaken**
- **(A) to measure brand loyalty of a class of consumers.**
- **(B) to predict market potential of a product on a future date.**
- **(C) to understand product-price relationship.**
- **(D) to make out a case for revision of an existing strategy.**
- **(E) All of the above**

**(v) Organisation culture is**
- **(A) appreciation for the arts in the organisation.**
- **(B) ability of the organization to act in a responsible manner to its employees.**
- **(C) combination of (A) and (B) above**
- **(D) deeper level of basic assumptions and beliefs that are shared by the members of the firm.**
- **(E) None of the above**

**(vi) Innovation strategy is**
- **(A) defensive strategy**
- **(B) offensive strategy**
- **(C) responding to anticipating customers and market demands**
- **(D) guerrilla strategy**
- **(E) harvesting strategy**

**Answer:**

**6.** (i) (b)
(ii) (a)
(iii) (c)
(iv) (e)
(v) (d)
(vi) (c)

# Suggested Answer_ Syllabus 2016_June2017_Paper 9

**Answer any two questions from the following:** **12×2=24**

**7. (a) Enlist the advantages of Strategic Management.** **6**

**(b) State various limitations of the BCG model.** **6**

**Answer:**

**7. (a)** Advantages of Strategic Management:
(i) Discharges Board Responsibility
(ii) Forces an Objective Assessment
(iii) Provides a Framework for Decision-Making
(iv) Supports Understanding & Buy-In
(v) Enables Measurement of Progress
(vi) Provides an Organizational Perspective

**(b)** Limitations of BCG model:
(i) How do you define your market? Segmentation strategies can provide a niche. A niche is inevitably a low or restricted share of the market, yet it is the heart of a focus strategy. Firms can profit servicing small low-growth niches.
(ii) Market growth and market share are assumed to be reliable pointers for cash flow. This is often not true. High market share does not necessarily mean high profits, especially if a firm has high costs, or has bought market share by low pricing.
(iii) Relative market share amongst competitors is not necessarily an indication of their competitive strengths at any particular time. After all, market leaders are vulnerable.
(iv) The BCG model might become a self-fulfilling prophecy: Dogs which could be made profitable might simply be left to the rather than be resuscitated.
(v) It does not suggest any response to declining markets other than withdrawal: many firms can make money in 'sunset industries'.
(vi) It ignores the extent to which a firm which serves a number of markets can exploit production synergies.
(vii) It ignores the threat of substitute products.

**8. (a) Briefly discuss important features which Human Resource Strategy may bring to bear on the organization.** **6**

**(b) List down some guidelines for formulation of the "Mission Statement".** **6**

**Answer:**

**8. (a)** Important features of Human Resource Strategy:
(i) Orientation of the members.
(ii) Facilitation of organizational changes as and when called for
(iii) Coping with diversity of workforce.
(iv) Maintaining competent and committed workforce in a competitive environment.
(v) Development of core competency.
(vi) Empowered workforce as an active resource.
(vii) Appropriate work culture and ethical norms.

**(b)** Guidelines for formulation of the "Mission Statement":
- It should be based on existing business capabilities "Who we are and what we do?"
- It should follow the long term strategy principles
- Profit making should not be the only mission of organisation
- It should be logical extension of business existing capabilities
- It should clearly and precisely present the future orientation of business
- It should include achievable missions

- It should be stated in a form that it becomes the motivating force to every member of organisation
- Mission statement once formed shall be communicated to every member of organisations
- It should include interest of customers and society

**9. Write short notes on any three of the following: 4×3=12**

**(a) Functional organisational structure**
**(b) Role of marketing**
**(c) Contingency plan**
**(d) Managerial Communication**

**Answer:**

**9. (a) Functional organisational structure:** The functional structure is characterized by the simultaneous combination of similar activities and the separation of dissimilar activities on the basis of function. All Cost Accountants are located in the Cost Accounting Department, and the HOD of Cost Accounting is responsible for all cost related activities. The same is true in marketing, research and development, and manufacturing.
The functional organization form is one of the most common organizational structures found in firms pursuing strategy of concentration or very high relatedness. A functional structure is most appropriate when the organization is small to medium size and relatively stable.

**(b) Role of marketing:** The first and foremost role of marketing is that it stimulates potential aggregate demand and thus enlarges the size of the market. It helps in the economic growth of a country. Through stimulation of demand people are motivated to work harder and earn additional money to buy the various ideas, goods and services being marketed. An additional advantage which accrues in the above context that it accelerates the process. (In India, it is believed that about one-fourth of GNP and more than one-third of agricultural output are still non-monetised).
Marketing plays a role in the discovery of entrepreneurial talent. Peter Drucker, a celebrated writer in the field of management, makes this point very succinctly when he observes that marketing is a multiplier of managers and entrepreneurs. It also helps in sustaining and improving the existing levels of employment.

**(c) Contingency plan:** A basic premise of good strategic management is that firms plan ways to deal with unfavourable and favourable events before they occur. Regardless of how carefully strategies are formulated, implemented, and evaluated, unforeseen events, such as strikes, boycotts, natural disasters, arrival of foreign competitors, and government actions, can make a strategy obsolete. To minimize the impact of potential threats, organizations should develop contingency plans as part of their strategy-evaluation process. Contingency plans can be defined as alternative plans that can be put into effect if certain key events do not occur as expected. Only high-priority areas require the insurance of contingency plans. Strategists cannot and should not try to cover all bases by planning for all possible contingencies. Contingency plans should be as simple as possible.

**(d) Managerial Communication:** The most important and basic strategy for a manager is simply to communicate well with the organisational people. This satisfies such basic human needs as recognition, a sense of belonging, and security. For example, such a simple action as a manager's attempting to become better acquainted with subordinates can contribute substantially to the satisfaction of each of these three needs. As another example, a message from a manager to a subordinate that praises the subordinate for a job well done can help satisfy the subordinate's recognition and security needs.

# INTERMEDIATE EXAMINATION
## GROUP - II
## (SYLLABUS 2016)

## SUGGESTED ANSWERS TO QUESTIONS

## DECEMBER - 2017

### Paper-9 : OPERATIONS MANAGEMENT AND STRATEGIC MANAGEMENT

**Time Allowed : 3 Hours** **Full Marks : 100**

**This figures in the margin on the right side indicate full marks.**
**This paper contains 2 Sections.**
**Both Sections are compulsory, subject to instructions provided against each.**
**All working must form part of your answer.**
**Assumptions, if any, must be clearly indicated.**

### Section - A
**(Operations Management)**

**1. (a) Choose the correct answer: 1x10=10**

**(i) The effective capacity is NOT influenced by which of the following factors:**
- **(a) Forecasts of demand**
- **(b) Plant and labour efficiency**
- **(c) Subcontracting**
- **(d) None of the above**

**(ii) Key aspects in process strategy does NOT include which of the following:**
- **(a) Make or buy decisions**
- **(b) Capital intensity**
- **(c) Process flexibility**
- **(d) Packaging**

**(iii) The example of worker involvement, as a recent trend in production/operations management is**
- **(a) SCM**
- **(b) Just-in-Time**
- **(c) Quality Circle**
- **(d) MRP**

**(iv) In an organization, the Production Planning and Control department comes under**
- **(a) Planning department**
- **(b) Manufacturing department**
- **(c) Personnel department**
- **(d) R & D department**

**(v) JIT stands for**
- **(a) Just In Time Purchase**
- **(b) Just In Time Production**
- **(c) Just In Time use of Materials**
- **(d) Just In Time Order the Material**

**(vi) In route sheet or operation layout, one has to show**
- **(a) a list of materials to be used**
- **(b) a list of machine tools to be used**
- **(c) every work center and operation to be done at that work center**
- **(d) the cost of product**

**(vii) One of the important charts used in Programme control is**
- **(a) Material chart**
- **(b) Gantt chart**
- **(c) Route chart**
- **(d) Inspection chart**

**(viii)Production planning in the intermediate range of time is termed as**
- **(a) Production planning.**
- **(b) Long range production planning.**
- **(c) Scheduling.**
- **(d) Aggregate planning.**

**(ix) Preventive maintenance is useful in reducing**
- **(a) Inspection Cost**
- **(b) Cost of premature replacement**
- **(c) Shutdown Cost**
- **(d) Set-up Cost of machine**

**(x) Which one of the following standards is associated with the "Quality Assurance in Production and Installation"?**
- **(a) ISO 9001**
- **(b) ISO 9002**
- **(c) ISO 9003**
- **(d) ISO 9004**

**(b) Match Column A with Column B: 1x6=6**

| Column A | Column B |
|---|---|
| (A) Fixture | (i) Conversion of Inputs into outputs |
| (B) Process layout | (ii) Network Analysis |
| (C) Capital Intensity | (iii) General purpose machines |
| (D) Operations Management | (iv)Mix of equipment and labour which will be used by the firm |
| (E) Crashing | (v) Appliance for holding the work |
| (F) Less prone to Obsolescence | (vi)Grouping together of similar machines in one department |

**(c) State whether the following statements are 'True' or 'False': 1x6=6**
- **(i) Customer service is a key objective of operations management.**
- **(ii) In general short term forecasting will be more useful in production planning.**
- **(iii) If the total float value is zero, it means the resources are just sufficient to complete the activity without any delay.**
- **(iv) Job Evaluation is a systematic approach to ascertain the labour worth of a job.**
- **(v) Load control is typically found wherever a particular bottleneck machine does not exist in the process of manufacturing.**
- **(vi) The term "aesthetics" which appeals to the human sense does not add value to the product.**

**Answer:**

1. (a) (i) (d)
(ii) (d)
(iii) (c)
(iv) (b)
(v) (b)
(vi) (c)
(vii) (b)
(viii) (d)
(ix) (c)
(x) (b)

(b)

| I | | II |
|---|---|---|
| (A) Fixture | (v) | Appliance for holding the work |
| (B) Process layout | (vi) | Grouping together of similar machines in one department |
| (C) Capital Intensity | (iv) | Mix of equipment and labour which will be used by the firm |
| (D) Operations Management | (i) | Conversion of Inputs into outputs |
| (E) Crashing | (ii) | Network Analysis |
| (F) Less prone to Obsolescence | (iii) | General purpose machines |

(c) (i) True
(ii) True
(iii) True
(iv) True
(v) False
(vi) False

**2. Answer any three questions from the following: 16×3=48**

**(a) Briefly explain the characteristics of the modern production system. 7**

**(b) A firm has four work centres, A, B, C & D, in series with individual capacities in units per day shown in the figure below.**

**Work Centres**

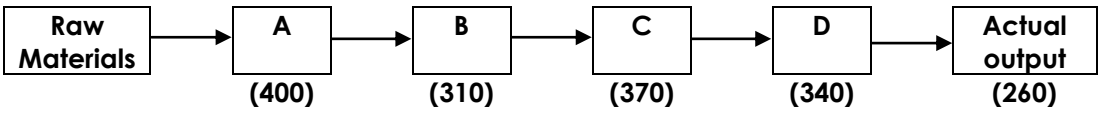


**(i) Identify the bottle neck centre.**
**(ii) What is the system capacity?**
**(iii) What is the system efficiency? 9**

**Answer:**

2. (a) 'The production management of today presents certain characteristics which make it look totally different from what it was during the past as follows:

1. **Manufacturing as Competitive Advantage:** In the past production was considered to be like any other function in the organisation. When the demand was high and production capacities were inadequate, the concern was to somehow muster all inputs and use them to produce goods which would be grabbed by market. But today's scenario is contrasting. Plants have excess capacities, competition is mounting and firms look and gain competitive advantage to survive and succeed. Production system offers vast scope to gain competitive edge and firms intend to exploit the potential. Total Quality Management (TQM), Time-Based Competition, Business Process Re-engineering (BPRE), Just-in-Time (JIT), Focused Factory, Flexible Manufacturing Systems (FMS), Computer Integrated Manufacturing (CIM), and The Virtual Corporation are some techniques which the companies are employing to gain competitive advantage.
2. **Services Orientation:** Service sector is gaining greater relevance these days. The production system, therefore, needs to be organised keeping in mind the peculiar requirements of the service component. The entire manufacturing needs to be geared to serve (i) intangible and perishable nature of the services, (ii)

constant interaction with clients or customers, (iii) small volumes of production to serve local markets, and (iv) need to locate facilities to serve local markets. There is increased presence of professionals on the production, instead of technicians and engineers.

3. **Disappearance of Smokestacks:** Protective labour legislation, environmental movement and gradual emergence of knowledge based organisations have brought total transformation in the production system. Today's factories are aesthetically designed and built, environment friendly - in fact, they are homes away from homes. Going to factory every day is no more excruciating experience, it is like holidaying at a scenic spot.
4. **Small has Become Beautiful:** It was E.F. Schumacher who, in his famous book Small is Beautiful, opposed giant organisations and increased specialisation. He advocated instead, intermediate technology based on smaller working units, community ownership, and regional workplaces utilising local labour and resources. For him, small was beautiful. Businessmen, all over the world, did not believe in Schumacher's philosophy. Inspired by economies of scale, industrialists went in for huge organisations and mass production systems.

(b) (i) The bottle neck centre is the work centre having the minimum capacity. Hence, work centre 'B' is the bottleneck centre.

(ii) System capacity is the maximum units that are possible to produce in the system as a whole. Hence, system capacity is the capacity of the bottle neck centre i.e., 310 units.

(iii) System efficiency = Actual output/ System capacity
= (260/310) x 100 (i.e., maximum possible output)
= 83.87%

**3. (a) Discuss about the following process types to be implemented by a Production Manager as a strategy: 3+4=7**
**(i) Batch Process,**
**(ii) Repetitive Process.**

**(b) Workers come to a tool store room to enquire about special tools (required by them) for accomplishing a particular project assigned to them. The average time between the two arrivals is 60 seconds and the arrivals are assumed to be in Poisson distribution. The average service time (of the tool room attendant) is 48 seconds.**

**Determine: 3x3=9**
**(i) Average Queue Length**
**(ii) Average Length of non-empty queues**
**(iii) Average number of workers in system including the worker being attended**

**Answer:**

3. (a) **(i) Batch process:** Batch processing is used when a moderate volume of goods or services is required and also a moderate variety in products or services. A batch process differs from the job process with respect to volume and variety. In batch processing, volumes are higher because same or similar products or services are repeatedly provided, examples of products produced in batches include paint, ice cream, soft drinks, books and magazines.

**(ii) Repetitive process:** This is used when higher volumes of more standardised goods or services are needed. This type of process is characterised by slight flexibility of equipment (as products are standardised) and generally low labour skills. Products produced include automobiles, home appliances, television sets, computers, toys etc. Repetitive process is also referred to as line process as it includes production lines and assembly lines in mass production. Resources are organised around a product or service and materials move in a line flow from

one operation to the next according to a fixed sequence with little work-in-progress inventory. This kind of process is suitable to "manufacture-to-stock" strategy with standard products held in finished goods inventory. However, "assemble-to-order" strategy and "mass customisation" are also possible in repetitive process.

(b) Arrival Rate: $\lambda$ = 60/60 per second = 1 per minute
Service Rate: $\mu$ = 60/48 per second= 1.25 per minute

(i) Average Queue Length: $L_q = (\lambda/\mu)\times[\lambda/(\mu - \lambda)]$ = (1/1.25)x[(1/(1.25 - 1)]
=1/(1.25x0.25) = 16/5
= 3.2 workers

(ii) Average Length of non-empty queues:
$L_n = [\mu/(\mu - \lambda)]$ = 1.25/(1.25-1) = 1.25/0.25 = 5 workers

(iii) Average number of workers in system:
$L_s = [\lambda/(\mu - \lambda)]$ = 1/(1.25-1) = 1/0.25 = 4 workers

**4. (a) The below Table shows the time remaining (number of days until due date) and the work remaining (number of days' work) for 5 jobs which were assigned the Letters A to E as they arrived to the shop. Sequence these jobs by priority rules viz., 2x5=10 (i) FCFS (ii) EDD (iii) LS (iv) SPT (v) LPT.**

| Job | Number of days until due date | Number of days' work remaining |
|---|---|---|
| **A** | **9** | **5** |
| **B** | **4** | **7** |
| **C** | **5** | **3** |
| **D** | **6** | **6** |
| **E** | **8** | **2** |

**(b) A department works on 8 hours shift, 285 days a year and has the usage data of a machine, as given below:**

| Product | Annual Demand (units) | Processing time (Standard time in hours) |
|---|---|---|
| **A** | **360** | **7-0** |
| **B** | **435** | **5-0** |
| **C** | **570** | **60** |

**Calculate:**
**(i) Processing time needed in hours to produce products A, B and C,**
**(ii) Annual production capacity of one machine in standard hours, and**
**(iii) Number of machines required. 2×3=6**

**Answer:**

4. (a) Numerical: The below Table shows the time remaining

| Job | Number of days until due date | Number of days work remaining |
|---|---|---|
| A | 9 | 5 |
| B | 4 | 7 |
| C | 5 | 3 |
| D | 6 | 6 |
| E | 8 | 2 |

(i) FCFS (First come first served): Since the jobs are assigned letters A to E as they arrived to the shop, the sequence according to FCFS priority rule is ABCDE.

(ii) EDD (Early Due Date job first) rule: Taking into account the number of days until due date, the sequence of jobs as per EDD rules is B C D E A ( 4 5 6 8 9).

(iii) L.S. (Least slack) rule also called as Minimum slack rule.
Calculation of slack:
Slack = (Number of days until due date) - (Number of days work remaining)

| Job | Slack | (Days) |
|---|---|---|
| A | 9-5 | =4 |
| B | 4-7 | =(-3) |
| C | 5-3 | =2 |
| D | 6-6 | = 0 |
| E | 8-2 | =6 |

Sequence = B D C A E
(-3 0 2 4 6)

(iv) SPT (Shortest Processing Time job first) also referred as SOT (Shortest Operation time job First) rule or MINPRT (Minimum Processing time job first) rule.
Sequence: E C A D B
(2 3 5 6 7)

(v) LPT (Longest Processing time job first) also referred to as LOT (Longest operation time job first) rule.
Sequence: B D A C E
(7 6 5 3 2)

(b) (i) The processing time needed in hours to produce products A, B and C in the quantities demanded visiting the standard time data;

| Product | Annual Demand (units) | Processing time (Standard time in hours) | Processing time needed (hours) |
|---|---|---|---|
| A | 360 | 7.0 | 360 x 7 = 2,520 |
| B | 435 | 5.0 | 435 x 5 = 2,175 |
| C | 570 | 6.0 | 570 x 6 = 3,420 |
| | | | Total = 8,115 hrs. |

(ii) Annual production capacity of one machine in standard hours = 8 x 285 = 2,280 hours/year

(iii) Number of machines required = Work load per year/Production capacity per machine = 8,115/2,280 = 3.5592 machines = 4 Machines

**5. (a) A Public Transport Company is experiencing the following number of breakdowns for months over the past 2 years in their new fleet of vehicles:**

| **Number of breakdowns** | **0** | **1** | **2** | **3** | **4** |
|---|---|---|---|---|---|
| **Number of months this occurred** | **3** | **6** | **9** | **4** | **2** |

**Each breakdown costs the company an average of ₹ 2,500. For a cost of ₹ 1,700 per month, preventive maintenance can be carried out to limit the breakdowns to an average of one per month. Which policy is suitable for the company? 10**

**(b) Draw the network for the following activities and find critical path and total duration of the project. 2+2+2=6**

| **Activity** | **Duration (months)** |
|---|---|
| **1-2** | **2** |
| **2-3** | **3** |
| **2-4** | **1** |
| **3-4** | **2** |
| **4-5** | **3** |
| **5-6** | **2** |
| **5-7** | **4** |
| **6-8** | **1** |
| **7-8** | **3** |
| **8-9** | **4** |

**Answer:**

**5.** (a) After converting the frequencies to a probability distribution and determining the expected cost/month of breakdowns, we get:

| Number of breakdowns | Frequency in months | Frequency in percent | Expected value |
|---|---|---|---|
| 0 | 3 | 3/24 = 0.125 | 0 |
| 1 | 6 | 6/24 = 0.25 | 0.25 |
| 2 | 9 | 9/24 = 0.375 | 0.75 |
| 3 | 4 | 4/24 = 0.167 | 0.5 |
| 4 | 2 | 2/24 = 0.083 | 0.334 |
| | | Total : 1 | Total: 1.834 |

Breakdown cost per month; Expected cost = 1.834 x ₹ 2500 = ₹ 4,585.
Preventive maintenance cost per month: -
Average cost of one breakdown/month = ₹ 2,500
Maintenance contract cost/month = ₹ 1,700
Total = ₹ 4,200.
Thus, preventive maintenance policy is suitable for the firm.

(b) Network diagram:

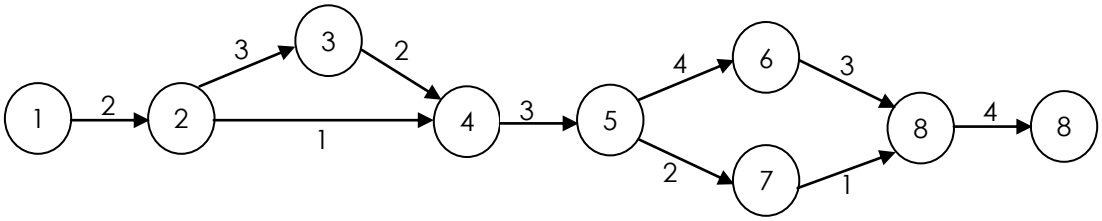


| Paths | Duration (months) |
|---|---|
| 1-2-3-4-5-7-8-9 | 2+3+2+3+4+3+4=21 (Critical path) |
| 1-2-3-4-5-6-8-9 | 2+3+2+3+2+1+4=17 |
| 1-2-4-5-7-8-9 | 2+1+3+4+3+4=17 |
| 1-2-4-5-6-8-9 | 2+1+3+2+1+4=13 |

## Section - B
**(Strategic Management)**

**6. Choose the correct answer:** **1×6=6**

**(i) Board of directors has certain basic tasks as follows:**
- **(a) To monitor plans and programs of production.**
- **(b) To design the course of strategic options and appointment of top management.**
- **(c) To control utilization of resources.**
- **(d) To monitor courses of actions for marketing management.**

**(ii) A Strategic Business Unit (SBU) is defined as a division of an organization:**
- **(a) That helps in the marketing operation.**
- **(b) That helps in the choice of technology.**
- **(c) That enables managers to have better control over the resources.**
- **(d) That helps in identifying talents and potentials of people.**

**(iii) Mckinsey's 7-s framework consists of:**
- **(a) Structure, Strategy, Software, Skills, Styles, Staff and Supervision**
- **(b) Structure, Strategy, Systems, Skills, Styles, Syndication and Shared values**
- **(c) Structure, Strategy, Systems, Skills, Steering power, Styles and Shared values**
- **(d) Structure, Strategy, Staff, Skills, Systems, Shared values, Style**
- **(e) None of the above**

**(iv) What are enduring statements of purpose that distinguish one business from other similar Firms?**
- **(a) Policies**
- **(b) Mission statements**
- **(c) Objectives**
- **(d) Rules**
- **(e) Nature of ownership**

**(v) Outsourcing is the**
- **(a) spinning off of a value-creating activity to create a new firm.**
- **(b) selling of a value-creating activity to other firms.**
- **(c) purchase of a value-creating activity from an external supplier.**
- **(d) use of computers to obtain value-creating data from the Internet.**

**(vi) For an actress in Bollywood, her pretty face would be a/an**
- **(a) Asset**
- **(b) Strategic asset**
- **(c) Core competency**
- **(d) Capability**
- **(e) All of the above**

**Answer:**

6. (i) (b)
(ii) (c)
(iii) (d)
(iv) (b)
(v) (c)
(vi) (b)

**Answer any two questions from the following: 12×2=24**

**7. (a) Explain, in one or two statements, a Company mission. State any three major objectives. 3+3=6**

**(b) Define the term 'Portfolio Analysis'. List the factors influencing Portfolio Strategy. 2+4=6**

**Answer:**

7. (a) A Company mission

The mission is a broadly framed but enduring statement of company intent. It embodies the business philosophy of strategic decision makers; implies the image the company seeks to project; reflects the firm's self-concept; indicates the principal product or service areas and primary customer needs the company will attempt to satisfy. In short, the mission describes the product, market, and technological areas of emphasis for the business in a way that reflects the values and priorities of the strategic decision makers.

Objectives:

1. To ensure unanimity of purpose within the organisation.
2. To provide a basis for motivating the use of the organisation's resources.
3. To develop a basis, or standard, for allocating organisational resources.
4. To establish a general tone or organisational climate, for example, to suggest a businesslike operation.
5. To serve as a focal point for those who can identify with the organisation's purpose and direction, and to deter those who cannot from participating further in the organisation's activities.
6. To facilitate the translation of objectives and goals into a work structure involving the assignment of tasks to responsible elements within the organisation.
7. To specify organisational purposes and the translation of these purposes into goals in such a way that cost, time, and performance parameters can be assessed and controlled.

(b) Portfolio analysis is a term used in describing methods of analysing a product -market portfolio with the following aims.

(i) To identify the current strengths and weaknesses of an organisation's products in its markets, and the state of growth or decline in each of these markets.

(ii) To identify what strategy is needed to maintain a strong position or improve a weak one.

Factors influencing Portfolio Strategy:

1) Mission/Vision.
2) Value system.
3) Future of Current Business.
4) Position on the Portfolio Matrix/PLC.
5) Government Policy.
6) Competitive Environment.
7) Company Resources.
8) Supply/Demand Conditions.
9) Competitive Moves.
10) Portfolio Strategy of Parent.
11) Business Environment.

8. **(a) Explain the terms: (i) Marketing Plan and (ii) Social Marketing. 3+3=6**

**(b) What is meant by a contingency plan? List its benefits. 2+4=6**

**Answer:**

8. (a) (i) Marketing Plan: Marketing plan is a written document that specifies in detail the firms marketing objectives and how marketing management will use the controllable marketing tools such as product design, channels, promotion and pricing to achieve these objectives.
Marketing strategy means finding attractive opportunities and developing profitable ways to capture the market.
A marketing strategy specifies a target market and a related marketing mix. It is a big picture of what a firm will do in some market. The job of planning strategies to guide a whole company is called strategic planning. It is the managerial process of developing and maintaining a match between an organisation's resources and its market opportunities.

(ii) Social Marketing: Societal marketing concept calls for a customer orientation backed by integrated marketing aimed at generating customer satisfaction and long-run consumer welfare as the key to attaining long-run profitable volume.

(b) Contingency Plan: A basic premise of good strategic management is that firms plan ways to deal with unfavorable and favorable events before they occur. Too many organizations prepare contingency plans just for unfavorable events; this is a mistake, because both minimizing threats and capitalizing on opportunities can improve a firm's competitive position.

Regardless of how carefully strategies are formulated, implemented, and evaluated, unforeseen events, such as strikes, boycotts, natural disasters, arrival of foreign competitors, and government actions, can make a strategy obsolete. To minimize the impact of potential threats, organizations should develop contingency plans as part of their strategy-evaluation process. Contingency plans can be defined as alternative plans that can be put into effect if certain key events do not occur as expected. Only high-priority areas require the insurance of contingency plans. Strategists cannot and should not try to cover all bases by planning for all possible contingencies. But in any case, contingency plans should be as simple as possible.

Benefits of Contingency Planning:

(i) It will make the future through their proactive planning and advanced preparation.

(ii) It will introduce original action by removing present difficulties.
(iii) It enables to anticipate future problems.
(iv) It will change the goals to suit internal and external changes.
(v) It experiments with creative ideas and take initiative.
(vi) It will attempt to shape the future and create a more desirable environment.
(vii) It permits quick response to change,
(viii) It prevents panic in crisis situations.
(ix) It makes managers more adaptable to unforeseen changes.

**9. Write short notes on any three of the following: 4×3=12**
**(a) Unrelated Diversification**
**(b) Hybrid Organization**
**(c) Strategy**
**(d) Time Frame of Objectives**

**Answer:**

9. (a) Unrelated Diversification
Unrelated Diversification is also termed conglomerate growth because the resulting corporation is a conglomerate, i.e. a collection of businesses without any relationship to one another. The strategic justifications advanced for this strategy are to:
- take advantage of poorly managed companies which can then be turned around and either run at a gain to the shareholders or sold-on at a profit;
- spread the risks of the firm across a wide range of industries;
- escape a mature or declining industry by using the positive cash flows from it to develop into new and more profitable areas of business.

(b) Hybrid Organization
A single type of structural design is not always sufficient to meet the requirements of strategy. When this occurs, one opinion is to mix and blend the basic organizations forms, matching structure to strategy, requirement by requirement, and unit by unit. Hybrid structure is a form of departmentalization that adopts parts of both functional and divisional structures at the same level of management. The major potential advantage of the hybrid structures is that the combination may allow the firm to gain the advantages offered by the primary structure while at least diminishing the impact of the disadvantages.

(c) Strategy
Strategy is all about integrating organizational activities and utilizing and allocating the scarce resources within the organizational environment so as to meet the present objectives. While planning a strategy it is essential to consider that decisions are not taken in a vacuum and that any act taken by a firm is likely to be met by a reaction from those affected, competitors, customers, employees or suppliers. Strategy can also be defined as knowledge of the goals, the uncertainty of events and the need to take into consideration the likely or actual behaviour of others. Strategy is the outline of decisions in an organization that shows its objectives and goals, reduces the key policies, and plans for achieving these goals, and defines the business the company is to carry on, the type of economic and human organization it wants to be, and the contribution it plans to make to its shareholders, customers and society at large.

(d) Time Frame of Objectives
Objectives are timeless, enduring, and unending; goals are temporal, time-phased, and intended to be superseded by subsequent goals. Because objectives relate to' the ongoing activities of an organisation, their achievement tends to be open-ended in the sense of not being bounded by time. For example, the survival objective of a business organisation is never completely attained since failure is always a future possibility.

# INTERMEDIATE EXAMINATION
## GROUP - II
## (SYLLABUS 2016)

## SUGGESTED ANSWERS TO QUESTIONS

## JUNE - 2018

### Paper-9 : OPERATIONS MANAGEMENT AND STRATEGIC MANAGEMENT

**Time Allowed : 3 Hours** **Full Marks : 100**

**This figures in the margin on the right side indicate full marks.**
**This paper contains 2 Sections.**
**Both Sections are compulsory, subject to instructions provided against each.**
**All working must form part of your answer.**
**Assumptions, if any, must be clearly indicated.**

### Section - A
**(Operations Management)**

**1. (a) Choose the correct answer: 1x10=10**

**(i) The recent trend in the Production/Operations management which suggests the use of minimal amount of resources to produce a high volume of high quality goods with some variety is referred to as:**
**(a) SCM**
**(b) TQM**
**(c) Lean Production**
**(d) Just-In-Time**

**(ii) Effective capacity can NOT be determined by which of the following factors?**
**(a) Product design and product-mix**
**(b) Quantity and quality capabilities**
**(c) Facilities**
**(d) None of the above**

**(iii) In which of the following stages the management should try to change its approach by changing its strategy from "buy my product" to "try my product"?**
**(a) Introduction**
**(b) Growth**
**(c) Maturity**
**(d) Decline**

**(iv) Conducting occasional check-ups of the products manufactured or assembled to ensure high quality of the production is known as:**
**(a) Planning**
**(b) Scheduling**
**(c) Inspection**
**(d) Routing**

**(v) Which one of the following standards is associated with the "Quality Assurance in Final Inspection Test"?**
**(a) ISO 9001**
**(b) ISO 9002**
**(c) ISO 9003**
**(d) ISO 9004**

(vi) With reference to project management, identify which of the following statement is NOT correct?
  (a) Gantt chart is a principal tool used in scheduling and also in some methods of loading.
  (b) Routing is the first step in the production planning.
  (c) The cost of any activity is proportional to its time of completion.
  (d) The free float can be calculated by subtracting EFT from EST.

(vii) Identify which one of the following statement is NOT correct?
  (a) Preventing maintenance includes lubrication, cleaning, periodic overhaul, etc.
  (b) The two types of cost-cost of premature replacement and cost of breakdown-need to be balanced.
  (c) Wear and obsolescence are the two main causes of replacement of machinery in every aspect of life.
  (d) A machine is technically obsolete when another machine can do the same job more efficiently with reduced time and also at a lower cost.

(viii) To determine where the plant should be located for maximum operating economy and effectiveness, refers to which one of the following?
  (a) Plant layout
  (b) Facility location
  (c) Capacity planning
  (d) Capacity requirement

(ix) Which of the following models deals with the physical movement of goods from different supply origins to a number of different demand destinations?
  (a) Simulation
  (b) Transportation
  (c) Lean operations
  (d) Line balancing

(x) One of the objectives of maintenance is:
  (a) to prevent obsolescence.
  (b) to ensure spare parts management.
  (c) to satisfy customers.
  (d) to extend the useful life of Plant & Machinery without sacrificing the level of performance.

(b) Match Column A with Column B: 1x6=6

| Column A | Column B |
|---|---|
| (A) The ability to adapt quickly to changes in volume of demand, in the product mix demanded and in product design or in delivery schedules | (i) Method Study |
| (B) To address the planning and controlling of a manufacturing process and all of its related support functions | (ii) Maintenance Stores |
| (C) Degree to which the system can be adjusted to changes in processing requirements | (iii) Flexibility |
| (D) Eliminating unnecessary motions or by changing the sequence of operation or the process itself | (iv) Network Analysis |
| (E) Certain specific techniques which can be used for planning, management and control of project | (v) MRP-II |
| (F) Availability of vital spare parts needs to be ascertained to meet an emergency like breakdown | (vi) Process Flexibility |

**(c) State whether the following statements are 'True' or 'False': 1x6=6**

**(i) The primary concern of production planning and control is the delivery of products to customers or to inventory stocks according to some predetermined schedule.**

**(ii) Capacity refers to the minimum load an operating unit can handle.**

**(iii) Job-shop process is used when a very highly standardized product is desired in high volumes.**

**(iv) The productivity is a measure of how much input is required to achieve a given output.**

**(v) One of the limitations of Gantt Chart is that it does not clearly indicate the details regarding progress of activities.**

**(vi) Preventive maintenance ensures greater safety to workers.**

**Answer:**

**1. (a)**

| | | |
|---|---|---|
| (i) | (c) | Lean Production |
| (ii) | (d) | None of the above |
| (iii) | (b) | Growth |
| (iv) | (c) | Inspection |
| (v) | (c) | ISO 9003 |
| (vi) | (d) | The free float can be calculated by subtracting EFT from EST. |
| (vii) | (a) | Preventive maintenance includes lubrication, cleaning, periodic overhaul, etc. |
| (viii) | (b) | Facility location |
| (ix) | (b) | Transportation |
| (x) | (d) | To extend the useful life of Plant & Machinery without sacrificing the level of performance |

**(b)**

| Column A | Column B |
|---|---|
| (A) The ability to adapt quickly to changes in volume of demand, in the product mix demanded and in product design or in delivery schedules | (iii) Flexibility |
| (B) To address the planning and controlling of a manufacturing process and all of its related support functions | (v) MRP-II |
| (C) Degree to which the system can be adjusted to changes in processing requirements | (vi) Process Flexibility |
| (D) Eliminating unnecessary motions or by changing the sequence of operation or the process itself | (i) Method Study |
| (E) Certain specific techniques which can be used for planning, management and control of project | (iv) Network Analysis |
| (F) Availability of vital spare parts needs to be ascertained to meet an emergency like breakdown | (ii) Maintenance Stores |

**(c)**

| | |
|---|---|
| (i) | True |
| (ii) | False |
| (iii) | False |
| (iv) | True |
| (v) | True |
| (vi) | True |

**Answer any three questions from the following: 16×3=48**

**2. (a) Categorise the objectives of operations management and discuss about each category. 2+4=6**

**(b) The monthly requirement of raw material for a company is 3200 units. The carrying cost is estimated to be 25% of the purchase price per unit, in addition to ₹ 2.5 per unit.**

**The purchase price of raw material is ₹ 24 per unit.**
**The ordering cost is ₹ 28 per order.**
**(i) You are required to find EOQ and Total cost.**
**(ii) What is the total cost when the company gets a concession of 6% on the purchase price if it orders 3200 units or more but less than 6200 units per month?**
**(iii) What happens when the company gets a concession of 15% on the purchase price when it orders 6,200 units or more?**
**(iv) Which of the above three ways of orders the company should adopt?**

**4+2+2+2=10**

**Answer:**

**2. (a)** Objectives of operations management can be categorised into:

(i) Customer service, and
(ii) Resource utilization

**(i) Customer service**

The first objective is the customer service for the satisfaction of customer wants. Customer service is therefore a key objective of operations management. The Operations Management must provide something to a specification which can satisfy the customer in terms cost and timing. Thus, primary objective can be satisfied by providing the 'right thing at the right price at the right time'. These three aspects of customer service - specification, cost and timing - are the principal sources of customer satisfaction and must, therefore, be the principal dimension of the customer service objective for operation managers. Generally an organization will aim reliably and consistently to achieve certain standards, or levels, on these dimensions, and operations managers will be influential in attempting to achieve these standards.

Hence, this objective will influence the operations manager's decisions to achieve the required customer service.

**(ii) Resource Utilization**

Another major objective is to utilize resources for the satisfaction of customer wants effectively, i.e., customer service must be provided with the achievement of effective operations through efficient use of resources. Inefficient use of resources or inadequate customer service leads to commercial failure of an operating system. Operations management is concerned essentially with the utilization of resources, i.e., obtaining maximum effect from resources or minimizing their loss, under-utilization or waste. The extent of the utilization of the resources' potential might be expressed in terms of the proportion of available time used or occupied, space utilization, levels of activity, etc. Each measure indicates the extent to which the potential or capacity of such resources is utilized. This is referred to as the objective of resource utilization.

Operations management is also concerned with the achievement of both satisfactory customer service and resource utilization. An improvement in one will often give rise to deterioration in the other. Often both cannot be maximized, and hence a satisfactory performance must be achieved on both objectives. All the activities of operations management must be tackled with these two objectives in mind, and many of the problems will be faced by operations managers because of this conflict. Hence, operations managers must attempt to balance these basic objectives.

**(b) (i)** D=3200 × 12 = 38,400 units per annum
$C_0$ = 28
$C_h$=2.5 + 25% of 24 = 8.5
EOQ = √[(2 × 28 × 38,400)/8.5] = 502.97 = 503 units (approx.)

Total Cost = $C_o + C_{rm} + C_h$
= [(38,400 × 28)/503)] + (38,400 × 24) + [(503 × 8.5)/2]
= 2,137.57 + 9,21,600 + 2,137.75
= 9,25,875.32

(ii) When the company has an option to order between 3200 and 6200 units, the EOQ should be calculated with a reduction in price by 6% (due to concession);
The purchase price = 94% of 24 = 22.56.
D = 38,400 units per annum;
$C_0$ = 28;
$C_h$ = 2.5 + 25% of 22.56 = 8.14
EOQ = √[(2 × 28 × 38,400)/8.14] = 513.98 = 514 units (approx.)
Total Cost = $C_0 + C_{rm} + C_h$
= [(38,400 × 28)/514)] + (38,400 × 22.56) + [(514 × 8.14)/2]
= 2091.828 + 8,66,304 + 2,091.98 = 8,70,487.8

(iii) When the company orders more than 6,200 units purchase price = 85% of 24 (because 15%) concession) = 20.4;
D = 38,400 units per annum;
$C_o$ = 28
$C_h$= 2.5 + 25% of 20.4 = 7.6
EOQ = √[(2 × 28 × 38,400)/7.6] = 531.92 = 532 units (approx.)
Total Cost = $C_0 + C_{rm} + C_h$
= [(38,400 × 28)/532)] + (38,400 × 20.4) + [(532 × 7.6)/2]
= 2021.052 + 7,83,360 + 2,021.6 = 7,87,402.65

(iv) Comparing these costs, we notice that the cost is minimum (7,87,402.65) for (iii) order. Therefore the company should adopt a policy of ordering 532 units per order.

**3. (a) "Virtually all goods or services are made by using some variation of one of three process Strategies". Discuss about each of the three process strategies. Also state the situation during the decline stage of a product life cycle. (2x3)+2=8**

**(b) Discuss the principles of scheduling. Explain briefly the relationship between routing and scheduling. 6+2=8**

**Answer:**

**3. (a)** The process strategies are: (i) process focus (ii) repetitive focus and (iii) product focus. Each of these three strategies are discussed below:

(i) **Process Focus:** Majority (about 75 per cent) of global production is devoted to low volume, high variety products in manufacturing facilities called job shops. Such facilities are organised around performing processes. For example, the processes might be welding, grinding or painting carried out in departments devoted to these processes. Such facilities are process focussed in terms of equipment, machines, layout and supervision. They provide a high degree of product flexibility as products move intermittently between processes. Each process is designed to perform a wide variety of activities and handle frequent changes. Such processes are called intermittent processes. These facilities have high variable costs and low utilisation of facilities.

(ii) **Repetitive Focus:** A repetitive process is a product oriented production process that uses modules. It falls between product focus and process focus. It uses modules which are parts or components prepared often in a continuous or mass production process. A good example of repetitive process is the assembly line

which is used for assembling automobiles and household appliances and is less flexible than process-focused facility. Personal computer is an example of a repetitive process using modules in which the modules are assembled to get a custom product with the desired configuration.

(iii) **Product Focus:** It is a facility organised around products, a product oriented, high-volume low-variety process. It is also referred to as continuous process because it has very long continuous production run. Examples of product focussed processes are steel, glass, paper, electric bulbs, chemicals and pharmaceutical products, bolts and nuts etc. Product-focussed facilities need standardisation and effective quality control. The specialised nature of the facility requires high fixed cost, but low variable costs requiring high facility utilisation.

Situation during the decline stage of a product life cycle:
At the final stage of decline, profit margins touch a low level, competition becomes severe and customers start using newer and better products. It is here that the story of a product ends - a natural but hard end.

**(b)** The principles of scheduling are:

(i) **The principle of optimum task size:** Scheduling tends to achieve its maximum efficiency when the task sizes are small and all tasks are of the same order of magnitude.

(ii) **The principle of the optimum Production plan:** Scheduling tends to achieve its maximum efficiency when the work is planned, so that it imposes an equal/even load on all the plant.

(iii) **The principle of the optimum operation sequence:** Scheduling tends to achieve its maximum efficiency when the work is planned so that the work centers are normally used in the same sequence.

The first principle has a tendency when applied, not only give good results but also to be self-correcting if it is ignored. For example, if in a functional batch production machine shop the loads imposed by different operations vary greatly in length it is possible that it will be necessary to break many of the long operations into one or more small batches, in order to get the other orders completed by due date. In effect, this principle only repeats the known advantage of maintaining a high rate of stock turn over, and of single phase ordering. The second principle merely states that the obvious fact that there will be less idle time and waiting time, if all the plant is evenly loaded by the production planners, then if some of the machines are over loaded perhaps because direct labour cost on them are lower and others are idle for part of the time due to shortage of work. The third principle says about principle of flow. Sometimes it is also true if we sequence some jobs, which need the same machine set up, at a time, this avoids machine ancillary time needed, in case, the jobs of the above type are done at different times.

For example, consider drilling a 10 mm hole in five different jobs may be done at a time so that the set up time required for five jobs can be once only.

**Relationship between Routing and Scheduling:**
Both routing and scheduling are interconnected as scheduling is difficult without routing and routing is also not effective without scheduling. Routing is a prerequisite for scheduling while time to be taken may form the basis of routing and that is fixed by scheduling.

**4. (a) A blacksmith supervisor in his workshop is considering how he should assign the four jobs that are to be performed, to four of the workers under him. He wants to assign the jobs to the workers such that the aggregate time to perform the jobs is the least.**

**Based on previous experience, he has the information on the time taken by the four workers in performing these jobs and the same is given in the table below:**

**Time Taken (in minutes) by 4 Workers**

| Worker | Job | | | |
|---|---|---|---|---|
| | A | B | C | D |
| 1 | 46 | 40 | 51 | 68 |
| 2 | 57 | 42 | 63 | 55 |
| 3 | 49 | 53 | 48 | 64 |
| 4 | 41 | 45 | 61 | 55 |

**Solve the assignment problem for optimal solution using Hungarian Method. 8**

**(b) At a tool service centre, the arrival rate is 3 per hour and the service potentials 4 per hour. Simple queue conditions exist. The hourly wage paid to the attendant at the service centre is ₹ 2 per hour and the hourly cost of a machinist away from his work is ₹ 5.**

**Calculate: 2x4=8**

**(i) The average number of machinists being served or waiting to be served at any given time.**

**(ii) The average time a machinist spends waiting for service.**

**(iii) The total cost of operating the system for an eight-hour day.**

**(iv) The cost of the system if there were two attendants working together as a team, each paid ₹ 2 per hour and each able to service on average 3 per hour.**

**Answer:**

**4. (a)** Step - 1 :

The minimum value of each row is subtracted from all elements in the row. It is shown in the reduced cost table, also called opportunity cost table, given below:

Table-1: Reduced Cost Table - 1

| Worker | Job | | | |
|---|---|---|---|---|
| | A | B | C | D |
| 1 | 6 | 0 | 11 | 28 |
| 2 | 15 | 0 | 21 | 13 |
| 3 | 1 | 5 | 0 | 16 |
| 4 | 0 | 4 | 20 | 14 |

Step 2:

For each column of this table, the minimum value is subtracted from all the other values. The columns that contain a zero would remain unaffected by this operation. Hence, only the fourth column values would change. Table-2 shows this.

Table - 2: Reduced Cost Table - 2

| Worker | Job | | | |
|---|---|---|---|---|
| | A | B | C | D |
| 1 | 6 | 0 | 11 | 15 |
| 2 | 15 | 0 | 21 | 0 |
| 3 | 1 | 5 | 0 | 3 |
| 4 | 0 | 4 | 20 | 1 |

Step 3:

Draw the minimum number of lines covering all zeros. As a general rule, we should first cover those rows/columns which contain larger number of zeros. Table 3 shows this.

| Worker | Job | | | |
|---|---|---|---|---|
| | A | B | C | D |

| | | | | |
|---|---|---|---|---|
| 1 | 6 | 0 | 11 | 15 |
| 2 | ~~15~~ | ~~0~~ | ~~21~~ | ~~0~~ |
| 3 | 1 | 5 | 0 | 3 |
| 4 | ~~0~~ | ~~4~~ | ~~20~~ | ~~1~~ |

Step 4:

Since the number of lines drawn is equal to 4 (= n), the optimal solution is obtained. The assignments are made after scanning the rows and columns for unit zeros. Assignments made are shown with squares as shown in Table 4.

Table - 4: Assignment of Jobs

| Worker | Job | | | |
|---|---|---|---|---|
| | A | B | C | D |
| 1 | 6 | [0] | 11 | 15 |
| 2 | 15 | ~~0~~ | 21 | [0] |
| 3 | 1 | 5 | [0] | 3 |
| 4 | [0] | 4 | 20 | 1 |

Assignments are made in the following order. Rows 1, 3, and 4 contain only one zero each. So assigned 1-B, 3-C, and 4-A. Since worker 1 has been assigned job B, we cross the zero in the second column of the second row. After making these assignments, only worker 2 and job D are left for assignment. The final pattern of assignments is 1-B, 2-D, 3-C, and 4-A, involving a total time of 40 + 55 + 48 + 41 = 184 minutes. This is the optimal solution to the problem.

**(b)** At a tool service centre, the arrival rate is 3 per hour and the service potentials are 4 per hour.
Arrival Rate: = $\lambda$ = 3 per hour
Service Rate: = $\mu$ = 4 per hour

(i) The average number of machinists being served or waiting to be served at any given time:
$L_n = [\lambda / ( \mu - \lambda)] = 3/(4-3) = 3$

(ii) The average time a machinist spends waiting for service:
$W_q = [(\lambda/\mu) \times 1/(\mu - \lambda)] = (3/4) \times 1/(4-3) = 0.75$ hours = 45 minutes.

(iii) Average time in the system:
$W_S = [1 / \mu - \lambda)] = 1/(4-3) = 1$ hr.

Average number of machinists in the system = 3 [As per (i) above]
Cost of three machinists being away from work = 5 x 3 = 15 per hour.
Attendant cost = 2 per hour
Total Cost / hour = 17 per hour

The total cost of operating the system for an eight - hour day: 17 x 8 = 136

(iv) It is assumed that there is still a single service point, but the average service rate is now
= 6 per hour.
=> Now $\lambda$ = 3 per hour
$\mu$ = 6 per hour
=> Average number in the system $L_n = [\lambda / (\mu - \lambda)] = 3/(6-3) = 1$
Average time spent in the system $W_S = 1/(\mu - \lambda)] = 1/(6-3)$
= 1/3 hours.
= (1/3) x 60 = 20 minutes.

| | |
|---|---|
| Machinists cost = 1/3 hour x 5 = | 1.67 |
| Attendant cost | 4.00 |
| Total Cost | 5.67 |

Cost per 8 hour day = 5.67 x 8 = 45.36

**5. (a) The following jobs have to be shipped a week from now(week has 5 working days)**

| **Job** | **A** | **B** | **C** | **D** | **E** | **F** |
|---|---|---|---|---|---|---|
| **Number of day's work remaining** | **4** | **5** | **8** | **7** | **6** | **3** |

**Sequence the jobs according to priority established by: 4x2=8**
**(i) Least slack rule**
**(ii) Critical ratio rule**

**(b) A cab operations company is experiencing the following number of breakdowns for months over the past 2 years in their new fleet of cabs:**

| **Number of breakdowns** | **0** | **1** | **2** | **3** | **4** |
|---|---|---|---|---|---|
| **Number of months this occurred** | **3** | **7** | **9** | **4** | **1** |

**Each breakdown costs the firm an average of 2,500. For a cost of 1,600 per month, preventive maintenance can be carried out to limit the breakdowns to an average of one per month. Which policy is suitable for the firm? 8**

**Answer:**

**5. (a)** (i) Calculation of slack:
Number of days until due date is 5 days for all jobs:

| Job | Slack | (Days) |
|---|---|---|
| A | 5-4 | 1 |
| B | 5-5 | 0 |
| C | 5-8 | (-3) |
| D | 5-7 | (-2) |
| E | 5-6 | (-1) |
| F | 5-3 | 2 |

| C | D | E | B | A | F |
|---|---|---|---|---|---|
| -3 | -2 | -1 | 0 | 1 | 2 |

(ii) Calculation of Critical ratio:
Critical ratio = Available time / Operation time
Critical Ratio for job A = 5/4 = 1.25
Critical Ratio for job B = 5/5 = 1.00
Critical Ratio for job C = 5/8 = 0.625
Critical Ratio for job D = 5/7 = 0.714
Critical Ratio for job E = 5/6 = 0.833
Critical Ratio for job F = 5/3 = 1.667

Job having least critical ratio is given the first priority and so on.

| Sequence | C | D | E | B | A | F |
|---|---|---|---|---|---|---|
| Critical Ratio | 0.625 | 0.714 | 0.833 | 1.00 | 1.25 | 1.667 |

**(b)** Converting the frequencies to a probability distribution and determining the expected cost/month of breakdowns we get:

| Number of breakdowns | Frequency in months | Frequency in percent | Expected value |
|---|---|---|---|
| 0 | 3 | 3/24=0.125 | 0 |
| 1 | 7 | 7/24=0.292 | 0.292 |
| 2 | 9 | 9/24=0.375 | 0.750 |
| 3 | 4 | 4/24=0.167 | 0.501 |
| 4 | 1 | 1/24=0.042 | 0.167 |
| Total: | 24 | Total = 1 | Total: 1.710 |

Breakdown cost per month; Expected cost = 1.710 * 2500 = 4,275.

Preventive maintenance cost per month: -
Average cost of one breakdown / month = 2,500
Maintenance contract cost/month = 1,600
Total = 4,100.
Thus, preventive maintenance policy is suitable for the firm.

## Section - B
**(Strategic Management)**

**6. Choose the correct answer: 1×6=6**

**(i) Which one of the following does NOT seem to be an advantage of the strategic management?**
- **(a) Discharges board responsibility**
- **(b) Provides a framework for decision-making**
- **(c) Forces an objective assessment**
- **(d) It can be expensive**

**(ii) Which of the following analyses 'products and businesses by market share and market growth'?**
- **(a) SWOT Analysis**
- **(b) BCG Matrix**
- **(c) PEST Analysis**
- **(d) Portfolio Analysis**

**(iii) Which one of the following is NOT part of the McKinsey's 7-S framework?**
- **(a) Skills**
- **(b) Staff**
- **(c) Systems**
- **(d) Supervision**

**(iv) Which one of the following statement is NOT correct?**
- **(a) Vision is the statement of the future.**
- **(b) The corporate mission is the purpose or reason for its existence.**
- **(c) Targets are formed from vision and mission statement of organizations.**
- **(d) Goals are objectives that are scheduled for attainment during planned period.**

**(v) Which of the following can NOT be the called as a strength of an organization?**
- **(a) Good Industrial relations**
- **(b) Incentives from State Government**
- **(c) Financially very sound**
- **(d) Raw materials source at a distance**

**(vi) Strategic Business Unit (SBU) structure does NOT experience one of the following as an advantage:**
- **(a) Higher career development opportunities**

**(b) Better control of categories of products manufacturing, marketing and distributions**
**(c) High cost approach**
**(d) Help in expanding in different related and unrelated businesses**

**Answer:**

**6.** (i) (d) It can be expensive
(ii) (b) BCG Matrix
(iii) (d) Supervision
(iv) (c) Targets are formed from vision and mission statement of organizations
(v) (d) Raw Materials source at a distance
(vi) (c) High Cost approach

**Answer any two questions from the following: 12×2=24**

**7. (a) Identify basic elements of strategic vision and discuss about the important purposes served by such strategic vision. 1½ + 2½ = 4**

**(b) Discuss in brief about the areas of attention for SWOT appraisal. State the purpose of such appraisal. 6+2=8**

**Answer:**

**7. (a)** Strategic vision specifies primarily three elements:

1. Forming a mission statement that defines what business the company presently is in? And "who we are and where we are now?"
2. Using this mission statement as base to define long term path by indicating choices about "Where we are going?"
3. Finally, communicating above strategic vision in clear and committed term.

Strategic Vision has important purposes, such as:

1. Clearly provides the direction that company wants to follow.
2. Identify the need of changing from existing direction or products, if stated in vision statement.
3. Create passionate environment in the organisation to steer the company with great excitement in selected direction.
4. Create creativity in every member of company to prepare company for future.
5. Promote entrepreneurship.

**(b)** SWOT appraisal should give particular attention to the following:

(i) **A study of past accounts and the use of ratios.** By looking at trends, or by comparing ratios (if possible) with those of other firms in a similar industry, it might be possible to identify strengths and weaknesses in major areas of the business. The assistance of a management accountant should be of great value in this work.
(ii) **Product position and product-market mix.**
(iii) **Cash and financial structure.** If a company intends to expand or diversify, it will need cash or sufficient financial standing in order to acquire subsidiaries by issuing shares.
(iv) **Cost structure.** If a company operates with high fixed costs and relatively low variable costs, it might be in a relatively weak position with regard to production capacity. High volumes of production and sale might be required to break even. In contrast, a company with low fixed costs might be more flexible and adaptable so that it should be able to operate at a lower breakeven point.
(v) **Managerial ability.** There may be a problem in attempting to assess this and objective measurements should be sought. The danger is that a poor management might overestimate their own ability and incorrectly analyse their weakness as strength.

The purpose of such appraisal is to express, qualitatively or quantitatively, which areas of the business have strengths to exploit, and which areas have weaknesses which must be improved. Although every area of the business should be investigated, only the areas of significant strength or weakness should warrant further attention.

While finalising the corporate plan together with corporate objectives, growth strategies, it would be necessary to make a review of the corporate strengths and weaknesses in connection with its mission and objectives. This is an important managerial task linked with corporate planning process.

**8. (a) State the different approaches in Strategic Planning. 4**

**(b) Categorise major reasons of SBU approach. 8**

**Answer:**

**8. (a)** There are three approaches that can be adopted to strategic planning:

(i) A top-down process, in which managers are given targets to achieve which they pass on down the line.

(ii) A bottom-up process, in which functional and line managers in conjunction with their staff submit plans, targets and budgets for approval by higher authority.

(iii) An iterative process, which involves both the top-down and bottom-up setting of targets. There is a to-and-from movement between different levels until agreement is reached. However, this agreement will have to be consistent with the overall mission, objectives and priorities and will have to be made within the context of the financial resources available to the organization. The iterative approach, which involves the maximum number of people, is the one most likely to deliver worthwhile and acceptable strategic plans.

**(b)** Some of major reasons of using SBU approach are as follow:

- A scientific method of grouping the businesses of a multi-business corporation which helps the firm in strategic planning.
- An improvement over the geographical grouping of businesses and strategic planning based on locational units.
- An SBU is a grouping of related businesses that can be taken up for strategic planning distinct from the rest of the businesses.
- Grouping the businesses on SBU lines helps the firm in strategic planning by removing the ambiguity and confusion generally seen in grouping businesses.
- Each SBU is a separate business from the strategic planning standpoint. In the basic factors, viz., mission, objectives, competition and strategy-one SBU will be distinct from another.
- Each SBU will have its own distinct set of competitors and its own distinct strategy.
- Each SBU will have a CEO. He will be responsible for strategic planning for the SBU.

**9. Write short notes on any three of the following: 4×3=12**

**(a) Marketing Plan and Strategy**

**(b) Geographic and Matrix structure for implementation of organisational strategy**

**(c) Types of firms/organisations for which BPR can be applied**

**(d) Difference between strategic management and strategic planning**

**Answer:**

**9. (a) Marketing Plan and Strategy.**

Marketing plan is a written document that specifies in detail the firm's marketing objectives and how marketing management will use the controllable marketing tools such as product design, channels, promotion and pricing to achieve these objectives. Marketing strategy means finding attractive opportunities and developing profitable ways to capture the market.

A marketing strategy specifies a target market and a related marketing mix. It is a big picture of what a firm will do in some market. The job of planning strategies to guide a whole company is called strategic planning. It is the managerial process of developing and maintaining a match between an organisation's resources and its market opportunities.

**(b) Geographic structure:**

In geographic structure, activities and personnel are grouped by specific geographic locations. Each geographic unit includes all functions required to produce and market products in that region. Organization according to geographic areas or territories is rather common structural form for large-scale enterprise whose strategies need to be tailored to fit the particular needs and features of different geographic locations.

**Matrix structure:**

Another way to achieve focus on multiple outcomes is with the matrix structure. The matrix structure creates a dual chain of command; two lines of budget authority and two sources of performance and reward. The key feature of the matrix is that product (or business) and functional lines of authority are overlaid to form a matrix or grid, between the product manager and functional manager.

**(c)** Types of firms / organisations for which BPR can be applied.

BPR could be implemented to all firms (manufacturing firms, retailers, services, etc.) and public organizations that satisfy the following criteria:

- Minimum Number of employees: 20 (at least 4 in management positions).
- Strong management commitment to new ways of working and innovation.
- Well formed IT infrastructure.

Business Process Reengineering could be applied to companies that confront problems such as the following:

- High operational costs
- Low quality offered to customers
- High level of "bottleneck" processes at pick seasons
- Poor performance of middle level managers
- Inappropriate distribution of resources and jobs in order to achieve maximum performance, etc.

**(d)** The basic difference between Strategic management and Strategic planning are as follows

| Strategic Management | Strategic Planning |
|---|---|
| (i) It is focused on producing strategic results; new markets; new products; new technologies etc. | (i) It is focused on making optimal strategic decisions. |
| (ii) It is management by results. | (ii) It is management by plans |
| (iii) It is an organizational action process. | (iii) It is an analytical process. |
| (iv) It broadens focus to include psychological, sociological and political variables | (iv)It is focused on business, economic and technological variables. |
| (v) It is about choosing things to do and also about the people who will do them. | (v) It is about choosing things to do. |

# INTERMEDIATE EXAMINATION

## GROUP II

## (SYLLABUS 2016)

## SUGGESTED ANSWERS TO QUESTIONS

## DECEMBER 2018

## Paper- 9: OPERATION MANAGEMENT AND STRATEGIC MANAGEMENT

**Time Allowed: 3 Hours** **Full Marks: 100**

**The figures in the margin on the right side indicate full marks.**

**This paper contains two Sections.**

**Both Sections are compulsory, subject to instructions provided against each.**

**All workings must form part of your answer.**

**Assumptions, if any, must be clearly indicated.**

**SECTION – A**

**Operations Management**

**1. (a) Choose the correct answer: 1×10 =10**

**(i) Which one of the following recent trends in Production/Operations management involves drastic measures or break through improvements to improve the performance of a firm?**

**(A) Corporate Downsizing**

**(B) Re-Engineering**

**(C) Technology**

**(D) TQM**

**(ii) The starting point of Production cycle is**

**(A) Product design**

**(B) Production planning**

**(C) Routing**

**(D) Market research**

**(iii) Which of the following process types is used when a very highly standardized product is desired in high volumes?**

**(A) Repetitive Process**

**(B) Batch Process**

**(C) Project Process**

**(D) Continuous Process**

**(iv) Which of the following aims at finding the best and most efficient way of using the available resources—men, materials, money and machinery?**

**(A) Method Study**

**(B) Work Study**

**(C) Time Study**

**(D) Motion Study**

**(v) Generally the size of the order for production in Job production is**

**(A) small**

**(B) large**

**(C) medium**

**(D) very large**

**(vi) Which one of the following statements is NOT correct?**

**(A) LFT is calculated from the LFT of the head event.**

**(B) Slack can be calculated by adding EFT and LFT of any job.**

**(C) EFT is the sum of the EST and the time of duration for any event.**

**(D) The Total Project time is the shortest possible time required in completing the project.**

**(vii) Which one of the following is NOT the advantage of Preventive Maintenance?**

**(A) Better product quality**

**(B) Greater safety to workers**

**(C) Increased breakdowns and downtime**

**(D) Fewer large-scale repairs**

**(viii) Which one of the following establishes time sequence of operations?**

**(A) Routing**

**(B) Sequencing**

**(C) Scheduling**

**(D) Dispatching**

(ix) MRP stands for

(A) Material Requirement Planning

(B) Material Reordering Planning

(C) Material Requisition Procedure

(D) Material Recording Procedure

(x) With reference to Aggregate Planning, identify which of the following statements is NOT correct?

(A) It is an Intermediate-term planning.

(B) It is made operational through a master schedule, that gives the manufacturing schedule.

(C) Facility planning and scheduling are closely related with the aggregate planning.

(D) It deals with the strategic decisions, such as purchase of facilities, introduction of new products, processes, etc.

(b) Match Column A with Column B: 1×6=6

| Column A | Column B |
|---|---|
| (A) Any place in a production process where materials tend to pile up or produced at rates of speed less rapid than the previous or subsequent operations | (i) Assignment |
| (B) It is used when a low volume of high variety goods are needed | (ii) Globalisation |
| (C) A special Linear Programming Problem | (iii) Bottleneck |
| (D) Steep increase in the level of competition among manufacturing firms throughout the world | (iv) Maintenance Request |
| (E) Systematic Quantitative structural approach to the problem of managing a project through to successful completion | (v) Job-Shop Process |
| (F) This must be made in writing to a central point in the organization | (vi) Network Analysis |

(c) State whether the following statements are 'True' or 'False': 1×6=6

(i) Short-term forecasting is useful to serve the purpose of estimating the inventory requirement.

(ii) The life cycle of a product has many points of similarity with the human life cycle.

(iii) The Linear Programming problem has two basic parts: the objective function and the constraint set.

(iv) The most widely used index of productivity is to work out the output per machine-hour.

(v) PERT is designed for repetitive projects, whereas CPM is suitable for non-repetitive projects.

(vi) Wear and obsolescence are two main causes for replacement of machinery in every aspect of life.

# Suggested Answer_Syl2016_Dec2018_Paper 9

**Answer: 1(a)**

(i) - (B) Re-engineering

(ii) - (D) Market Research

(iii) - (D) Continuous Process

(iv) - (B) Work Study

(v) - (A) Small

(vi) - (B) Slack can be calculated by adding EFT and LFT of any job.

(vii) - (C) Increased breakdowns and downtime

(viii) -(C) Scheduling

(ix) - (A) Material Requirement Planning

(x) – (D) It deals with the strategic decisions, such as purchase of facilities, introduction of new products, processes, etc.

**Answer: 1(b)**

| Column A | Column B |
|---|---|
| (A) Any place in a production process where materials tend to pile up or produced at rates of speed less rapid than the previous or subsequent operations | (iii) Bottleneck |
| (B) It is used when a low volume of high variety goods are needed | (v) Job-Shop Process |
| (C) A special Linear Programming Problem | (i) Assignment |
| (D) Steep increase in the level of competition among manufacturing firms throughout the world | (ii) Globalisation |
| (E) Systematic Quantitative structural approach to the problem of managing a project through to successful completion | (vi) Network Analysis |
| (F) This must be made in writing to a central point in the organization | (iv) Maintenance Request |

**Answer: 1(c)**

(i) True

(ii) True

(iii) True

(iv) False

(v) False

(vi) True

**Answer any three questions from the following: 16×3= 48**

**2. (a) Explain the concept of Operating System in order to have a clear idea of Operations Management.**

**(b) With the help of following data, project the trend of sales for the next 5 years: 6+10=16**

# Suggested Answer_Syl2016_Dec2018_Paper 9

| Years | 2002 | 2003 | 2004 | 2005 | 2006 | 2007 |
|---|---|---|---|---|---|---|
| Sales in Lakhs of Rupees | 120 | 130 | 135 | 140 | 150 | 165 |

**Answer: 2(a)**

In order to have a clear idea of Operations Management, one must have an idea of 'Operating Systems'.

An Operating System is defined as a configuration of resources combined for the provision of goods or services.

Retail organizations, hospitals, bus and taxi services, tailors, hotels and dentists are all examples of operating systems. Any operating system converts inputs, using physical resources, to create outputs, the function of which is to satisfy customers wants. The creation of goods or services involves transforming or converting inputs into outputs. Various inputs such as capital, labour, and information are used to create goods or services using one or more transformation processes (e.g., storing, transporting, and cutting). To ensure that the desired output are obtained, an organization takes measurements at various points in the transformation process (feedback) and then compares with them with previously established standards to determine whether corrective action is needed (control).

It is important to note that goods and services often occur jointly. For example, having the oil changed in your car is a service, but the oil that is delivered is a good. Similarly, house painting is a service, but the paint is a good.

The goods-service combination is a continuum. It can range from primarily goods, with little service, to primarily service, with few goods. Because there are relatively few pure goods or pure services, companies usually sell product packages, which are a combination of goods and services. There are elements of both goods production and service delivery in these product packages. This makes managing operations more interesting, and also more challenging.

**Answer: 2(b)**

Computation of trend values of sales:

| Year | Time deviations from the middle of 2004 and 2005 assuring 5 years = 1 | Sales (in lakhs of Rs.) | Squares of time deviation | Product of time deviation and sales |
|---|---|---|---|---|
| | X | Y | $X^2$ | XY |
| 2002 | -5 | 120 | 25 | -600 |
| 2003 | -3 | 130 | 9 | -390 |
| 2004 | -1 | 135 | 1 | -135 |
| 2005 | +1 | 140 | 1 | +140 |
| 2006 | +3 | 150 | 9 | +450 |
| 2007 | +5 | 165 | 25 | +825 |
| n=6 | $\sum x = 0$ | $\sum x = 840$ | $\sum x^2 = 70$ | $\sum XY = 290$ |

Regression equation of Y on X:

$\sum Y = a + bX$

To find the values of a and b:

a = ∑Y/n = 840/6 = 140

b = ∑XY/∑$X^2$

= 290/70 = 4.143 approx.

Sales forecast for the next five years, i.e., 2008 to 2012:

$Y_{2008}$ = 140 + [29/7 × (+7)] = 169 lacs

$Y_{2009}$ = 140 + [29/7 × (+9)] = 177.28 lacs

$Y_{2010}$ = 140 + [29/7 × (+11)] = 185.57 lacs

$Y_{2011}$ = 140 + [29/7 × (+13)] = 193.85 lacs

$Y_{2012}$ = 140 + [29/7 × (+15)] = 202.14 lacs

**3. (a) What are the various activities and responsibilities of product design?**

**(b) Describe the objectives of Production Planning and Control. 6+10=16**

**Answer: 3(a)**

Various activities & responsibilities of Product design:

(i) Translating customer needs and wants into product and service requirements (marketing).

(ii) Refining existing products (marketing).

(iii) Developing new products (marketing, product design and production).

(iv) Formulating quality goals (quality assurance, production).

(v) Formulating cost targets (accounting).

(vi) Constructing and testing prototype (marketing, production).

(vii) Documenting specifications (product design).

**Answer: 3(b)**

Objectives of Production Planning and Control:

(i) Analysing the orders to determine the raw materials and parts that will be required for their completion,

(ii) Answering questions from customers and salesmen concerning the status of their orders,

(iii) Assisting the costing department in making cost estimates of orders,

(iv) Assisting the human resource departments in the manpower planning and assignment of men to particular jobs,

(v) Controlling the stock of finished parts and products,

(vi) Determining the necessary tools required for manufacturing,

(vii) Direction and control of the movement of materials through production process,

(viii) Initiating changes in orders as requested by customers while orders are in process,

(ix) Issuing requisitions for the purchase of necessary materials,

(x) Issuing requisitions for the purchase or manufacture of necessary tools and parts,

(xi) Keeping the up-to-date records scheduled and in process,

(xii) Maintaining stocks of materials and parts,

(xiii) Notifying sales and accounting of the acceptance of orders in terms of production feasibility,

(xiv) Preparing the route sheets and schedules showing the sequence of operation required to produce particular products,

(xv) Production of work orders to initiate production activities,

(xvi) Receiving and evaluating reports of progress on particular orders and initiating corrective action, if necessary,

(xvii) Receiving orders from customers,

(xviii) Revising plans when production activities cannot conform to original plans and when revisions in scheduled production are necessary because of rush orders.

**4. (a) Find initial Feasible Solution by North-West Corner method.**

| | W1 | W2 | W3 | W4 | SUPPLIES |
|---|---|---|---|---|---|
| F1 | 47 | 59 | 55 | 57 | 150 |
| F2 | 44 | 54 | 52 | 59 | 270 |
| F3 | 49 | 64 | 59 | 61 | 370 |
| F4 | 51 | 63 | 54 | 60 | 230 |
| DEMAND | 210 | 330 | 260 | 220 | |

**$W_j$ → Warehouse**

**$F_j$ → Factory, and**

**Cell entries are unit costs.**

**(b) A departmental store is running a snack items selling outlet. Past data of snack items' demand per week in hundred kgs with frequency is given below:**

| Demand/Week | 0 | 6 | 12 | 18 | 24 | 30 |
|---|---|---|---|---|---|---|
| Frequency | 3 | 10 | 9 | 20 | 6 | 2 |

**Using the following sequence of random numbers, generate the demand for next 10 weeks. Also find out the average demand per week.**

| Random Numbers | 21 | 34 | 48 | 97 | 72 | 31 | 45 | 56 |
|---|---|---|---|---|---|---|---|---|
| | 47 | 37 | 82 | 44 | 67 | 75 | 63 | |

**6+(8+2)=16**

# Suggested Answer_Syl2016_Dec2018_Paper 9

**Answer: 4(a)**

Initial Feasible Solution by North- West Corner method.

| | W1 | W2 | W3 | W4 | SUPPLIES |
|---|---|---|---|---|---|
| F1 | 150<br>47 | 59 | 55 | 57 | 150 |
| F2 | 60<br>44 | 210<br>54 | 52 | 59 | 270 |
| F3 | 49 | 120<br>64 | 250<br>59 | 61 | 370 |
| F4 | 51 | 63 | 10<br>54 | 220<br>60 | 230 |
| DEMAND | 210 | 330 | 260 | 220 | |

**Answer: 4(b)**

**Random No. Range Table for demand**

| Demand per week | Frequency | Probability | Cumulative Probability | Range |
|---|---|---|---|---|
| 0 | 3 | 0.06 | 0.06 | 0-5 |
| 6 | 10 | 0.20 | 0.26 | 6-25 |
| 12 | 9 | 0.18 | 0.44 | 26-43 |
| 18 | 20 | 0.40 | 0.84 | 44-83 |
| 24 | 6 | 0.12 | 0.96 | 84-95 |
| 30 | 2 | 0.04 | 1.00 | 96-99 |
| | ∑f= 50 | 1.00 | | |

**Simulated value for next 10 weeks**

| Weeks | R. Nos. | Demand |
|---|---|---|
| 1 | 21 | 6 |
| 2 | 34 | 12 |
| 3 | 48 | 18 |
| 4 | 97 | 30 |
| 5 | 72 | 18 |
| 6 | 31 | 12 |
| 7 | 45 | 18 |
| 8 | 56 | 18 |
| 9 | 47 | 18 |
| 10 | 37 | 12 |
| | TOTAL | 162 |

Average Weekly Demand: 162/10= 16.2

# Suggested Answer_Syl2016_Dec2018_Paper 9

**5. (a) Draw the network for the following activities and find the critical path and total duration of the project.**

| Activity | Duration(months) |
|---|---|
| 1-2 | 3 |
| 2-3 | 4 |
| 2-4 | 5 |
| 2-5 | 6 |
| 3-4 | 3 |
| 3-6 | 5 |
| 4-6 | 7 |
| 5-6 | 4 |
| 6-7 | 5 |

**(b) An automotive firm is using a machine whose purchase price is Rs. 18,000.**

**The Installation charges amount to Rs.3,800 and the machine has a scrap value of only Rs.1,800 because the firm has a monopoly of this type of work. The maintenance cost in various years is given in the following table:**

| Year | 1 | 2 | 3 | 4 | 5 | 6 | 7 | 8 | 9 |
|---|---|---|---|---|---|---|---|---|---|
| Maintenance cost (Rs.) | 250 | 720 | 1200 | 1700 | 2300 | 3200 | 4300 | 4800 | 6300 |

**The firm wants to determine after how many years should the machine be replaced on economic considerations, assuming that the machine replacement can be done only at the year end. (2×3)+10 = 16**

**Answer: 5(a)**

**Network diagram:**

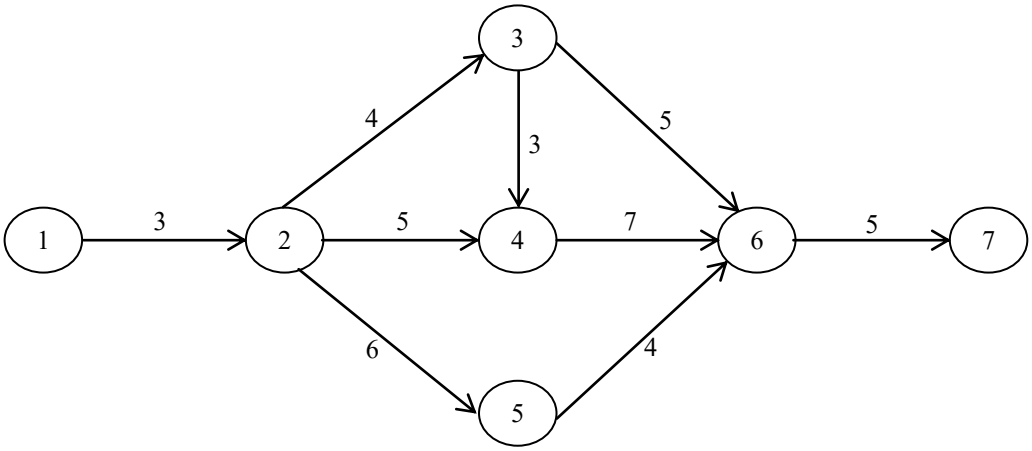


**Paths and their durations: -**

1-2-3-6-7 → 3+4+5+5 =17 months

1-2-3-4-6-7 → 3+4+3+7+5 = 22 months → Critical Path

1-2-4-6-7 → 3+5+7+5 =20 months

I-2-5-6-7 → 3+6+4+5 =18 months

**Answer: 5(b)**

**An automotive firm is using a machine...**

Cost of machine, C = Rs. 18,000 + 3,800 = 21,800
Scrap Value, S = Rs. 1,800

| Year | Maintenance Cost, $M_j$ (Rs.) | Cumulative Maintenance Cost, $\sum M_j$ (Rs.) | C - S (Rs.) | Total Cost $T_{(n)}$ (Rs.) | Annual Cost $A_{(n)}$ (Rs.) |
|---|---|---|---|---|---|
| (i) | (ii) | (iii) | (iv) | (v)=(iii)+(iv) | (vi)=(v)/n |
| 1 | 250 | 250 | 21,800 -1,800 = 20,000 | 20,250 | 20,250 |
| 2 | 720 | 970 | 20,000 | 20,970 | 10,485 |
| 3 | 1,200 | 2,170 | 20,000 | 22,170 | 7,390 |
| 4 | 1,700 | 3,870 | 20,000 | 23,870 | 5,967.5 |
| 5 | 2,300 | 6,170 | 20,000 | 26,170 | 5,234 |
| 6 | 3,200 | 9,370 | 20,000 | 29,370 | 4,895 |
| 7 | 4,300 | 13,670 | 20,000 | 33,670 | 4,810 |
| 8 | 4,800 | 18,470 | 20,000 | 38,470 | 4,808.8 |
| 9 | 6,300 | 24,770 | 20,000 | 44,770 | 4,974.4 |

Lowest average cost is Rs. 4808.8 approx., which corresponds to n = 8 in above table. Thus machine needs to be replaced every 8th year.

**SECTION – B**

**Strategic Management**

**6. Choose the correct answer: 1×6=6**

**(i) A corporate strategy can be defined as**

**(A) A list of actions about operational planning and statement of organisation structure and control system.**

**(B) A statement of how to compete, direction of growth and method of assessing environment.**

**(C) Abatement of organisation's activities and allocation of resources.**

**(D) A course of action or choice of alternatives, specifying the resources required to achieve certain stated objectives.**

**(ii) The existence of price-wars in the airline industry in India indicates that**

**(A) customers are relatively weak because of the high switching costs created by frequent flyer programmes.**

**(B) the industry is moving towards differentiation of services.**

**(C) the competitive rivalry in the industry is severe.**

**(D) the economic segment of the external environment has shifted, but the airline strategies have not changed.**

**(iii) Business Process Re-engineering is**

**(A) eliminating loss-making process.**

**(B) redesigning operational processes.**

**(C) redesigning the product and services.**

**(D) recruiting the process engineers.**

**(iv) Which one or more of the following are appropriate as a judicious mix for a Product line, which is a group of products?**

**(A) That are closely related.**

**(B) That are marketed through the same channel.**

**(C) That perform a similar function for being sold to the same customers.**

**(D) All of the above**

**(v) The Product Market matrix comprising of Strategies of Market Penetration, Market Development, Product Development, and Diversification was first formulated by**

**(A) Ansoff**

**(B) Drucker**

**(C) Porter**

**(D) Prahlad**

**(vi) Price fixation for the first time takes place when**

**(A) a company develops or acquires a new product.**

**(B) introducing existing product into a new geographic area or a new distribution channel.**

**(C) a service, the company bids for a new contract work.**

**(D) All of the above**

**Answer: 6**

(i) - (D) A course of action or choice of alternatives, specifying the resources required to achieve certain stated objectives.

(ii) - (C) The competitive rivalry in the industry is severe.

(iii) - (B) Redesigning operational processes.

(iv) - (D) All of the above.

(v) - (A) Ansoff.

(vi) - (D) All of the above.

**Answer any two questions from the following: 12×2=24**

**7. (a) 'There are primarily three levels of strategies in the organisation'. List the three levels. Build up one or two meaningful sentences to clarify the role of each level.**

**(b) What is meant by SWOT analysis? 8+4=12**

**Answer: 7(a)**

There are primarily three levels of strategies in the organisation.

i) Corporate Level
ii) Business Level
iii) Functional Level

**i) Corporate Level:**

The corporate level of management consisting of the chief executive officer (CEO), other senior executives, the board of directors, and corporate staff, empowered in decision-making within the organisation, is to oversee the development of strategies for the whole organisation. This role includes defining the mission and goals of the organisation, determining what businesses it should be in, allocating resources among the different businesses, formulating and implementing strategies that span individual businesses, and providing leadership for the organisation.

**ii) Business Level:**

A business unit is a self-contained division (with its own functions-for example, finance, purchasing, production, and marketing departments) that provides a product or service for a particular market. The strategic role of these managers is to translate the general statements of direction and intent that come from the corporate level into concrete strategies for individual businesses..

**iii) Functional Level:**

Functional-level managers are responsible for the specific business functions or operations (human resources, purchasing, product development, customer service, and so on) that constitute a company or one of its divisions. Thus, a functional manager's sphere of responsibility is generally confined to one organizational activity, whereas general managers oversee the operation of a whole company or division.

**Answer: 7(b)**

**SWOT Analysis:** Gathering data about the general, operating, and internal environments provides the raw material from which to develop a picture of the organizational environment.

**SWOT analysis** refines this body of information by applying a general framework for understanding and managing the environment in which an organisation operates. The acronym SWOT stands for Strengths, Weaknesses, Opportunities, and Threats.. In many respects, the sophisticated analytical techniques discussed throughout the text are further refinements of basic SWOT analysis. In addition, SWOT is an excellent way to begin a case analysis. SWOT analysis attempts to assess the internal strengths and weaknesses of an organisation and the opportunities and threats that its external environment presents. SWOT seeks to isolate the major issues facing an organisation through careful analysis of each of these four elements. Managers can then formulate strategies to address key issues.

The purpose of such appraisal is to express, qualitatively or quantitatively, which areas of the business have strengths to exploit, and which areas have weaknesses which must be improved. Although every area of the business should be investigated, only the areas of significant strength or weakness should warrant further attention

**8. (a) Categorise seven-steps process of Contingency Planning.**

**(b) How does Matrix Organisation Structure differ from SBU Structure? Analyse related advantages and disadvantages of Matrix Organisation Structure. 6+6=12**

**Answer: 8(a)**

**Steps in Contingency Planning**

Step 1 - Identify the beneficial and unfavourable events that could possibly derail the strategy or strategies.

Step 2 - Specify trigger points. Calculate about when contingent events are likely to occur. Step 3 - Assess the impact of each contingent event. Estimate the potential benefit or harm, of each contingent event.

Step 4 - Develop contingency plans. Be sure that contingency plans are compatible with current strategy and are economically feasible.

Step 5 - Assess the counter impact of each contingency plan. That is, estimate how much each contingency plan will capitalize on or cancel out its associated contingent event. Doing this will quantify the potential value of each contingency plan.

Step 6 - Determine early warning signals for key contingency event. Monitor the early warning signals.

Step 7 - For contingent event with reliable early warning signals, develop advance action plans to take advantage of the available lead time.

**Answer: 8(b)**

SBU Organisation Structure consist of flow of authority from top to bottom i.e. vertical flow whereas Matrix Organisation Structure contains both vertical and horizontal flow of communications or authority. This type of structure is frequently used in IT organization for managing different projects. Each individual project is managed by a project manager and projects manager will have his team arranged under him.

**Advantages:**

(i) Useful for some specific industries like Information Technology, Healthcare etc.

(ii) Employee can see visible results of their efforts

(iii) Remove barrier to communications

(iv) Managing projects are easy

(v) Effective structures when environment is very dynamic

**Disadvantages:**

(i) Complex structure as this contains both vertical and horizontal flow of information

(ii) High cost approach due to more management positions

(iii) Dual lines of authority

(iv) Conflicts arises in the allocation of resources

**9. Write short notes on any three of the following: 4×3=12**

**(a) Corporate Planning**

**(b) Definition of the terms 'Re-engineering' and 'Process' in Business Process Re-engineering**

**(c) Stages of Strategic Management Framework**

**(d) Steps involved in the formulation of production strategy**

**Answer: 9(a)**

# Suggested Answer_Syl2016_Dec2018_Paper 9

Corporate Planning is concerned with determination of objectives treating the company as a whole. It develops means to achieve the company's overall objectives. The corporate plans may relate to achieve corporate objectives for short-run and/or long-run. It is an integrated systems approach considering different functions, divisions and units of the organization. Such corporate plans are framed at the corporate level by the top management.

**Answer: 9(b)**

**Re-engineering** is the fundamental rethinking and radical redesign of business processes to achieve dramatic improvements in critical contemporary measures of performance such as cost, quality, service and speed.

**Process** is a structured, measured set of activities designed to produce a specified output for a particular customer or market. It implies a strong emphasis on how work is done within an organization. Each process is composed of related steps or activities that use people, information, and other resources to create value for customers.

**Answer: 9(c)**

The basic framework of strategic management involves five stages:

**Stage 1**: In this stage, organisation analyse about their present situation in terms of their Strengths, Weaknesses, Opportunities and Threats.

**Stage 2:** In this stage, organisations setup their missions, goals and objectives by analysing where they want to go in future.

**Stage 3**: In this stage organisation analyses various strategic alternatives to achieve their - goals and objectives. The alternatives are analysed in terms of what business portfolio/product mix to adopt, expansion, merger, acquisition and divestment options etc. are analysed to achieve the goals.

**Stage 4**: In this organisations select the best suitable alternatives in line with their SWOT analysis

**Stage 5:** This is implementation stage in which organisation implement and execute the selected alternatives to achieve their strategic goals and objectives.

**Answer: 9(d)**

The following steps are involved in the formulation of production strategy:

(i) Study the overall corporate plan and define the objectives.

(ii) Analyse the present production operations and the present and future environment.

(iii) Review sales- forecast and marketing.

(iv) Make strategic decisions for production.

# INTERMEDIATE EXAMINATION

## GROUP II

## (SYLLABUS 2016)

## SUGGESTED ANSWERS TO QUESTIONS

## JUNE 2019

## Paper- 9: OPERATIONS MANAGEMENT AND STRATEGIC MANAGEMENT

**Time Allowed: 3 Hours** **Full Marks: 100**

*The figures in the margin on the right side indicate the full marks.*

*This paper contains two Sections.*

*Both Sections are compulsory, subject to instructions provided against each.*

*All working must form part of your answer.*

*Assumptions, if any, must be clearly indicated.*

### Section A

### Operations Management

**1. (a) Choose the correct answer:** **1x10=10**

**(i) Inventory cost per product in intermittent production is**

**(A) Higher**

**(B) Lowest**

**(C) Medium**

**(D) Abnormal**

**(ii) The act of assessing the future and make provisions for it is known as**

**(A) Planning**

**(B) Forecasting**

**(C) Assessment**

**(D) Scheduling**

**(iii) One of the important charts used in Programme control is**

- **(A) Material chart**
- **(B) Gantt chart**
- **(C) Route chart**
- **(D) Inspection chart**

**(iv) Cost reduction can be achieved through**

- **(A) Work sampling**
- **(B) Value analysis**
- **(C) Quality assurance**
- **(D) Supply chain management**

**(v) Linear Programming is a technique used for determining**

- **(A) Production Programme**
- **(B) Plant Layout**
- **(C) Product Mix**
- **(D) Manufacturing Sequence**

**(vi) (Total station time/cycle time x Number of work stations) x 100 is known as**

- **(A) Line efficiency**
- **(B) Line smoothness**
- **(C) Balance delay of line**
- **(D) Station efficiency**

**(vii) Arrangement of machines depending on sequence of operations happens in**

- **(A) Process Layout**
- **(B) Product Layout**
- **(C) Hybrid Layout**
- **(D) Group Technology Layout**

**(viii) Line of Best fit is another name given to**

- **(A) Method of Least Squares**
- **(B) Moving Average Method**
- **(C) Semi Average Method**
- **(D) Trend Line Method**

**(ix) In route sheet or operation layout, one has to show**

- **(A) A list of materials to be used.**
- **(B) A list of machine tools to be used.**

**(C) Every work center and the operation to be done at that work center.**

**(D) The cost of product.**

**(x) Computers are used in Production control in this area**

**(A) follow-up activity.**

**(B) to control labour.**

**(C) to disseminate information.**

**(D) Loading, Scheduling and Assignment works.**

**(b) Match Column A with Column B:** **1x6=6**

| Column A | Column B |
|---|---|
| (A) Cost Benefit Analysis | (i) Crashing |
| (B) Network Analysis | (ii) Product Design |
| (C) Television Set | (iii) Plant Layout |
| (D) Use of Templates | (iv) Method Study |
| (E) Computer Aided Design | (v) Project Viability Checking |
| (F) Motion Economy | (vi) Assembly Line |

**(c) State whether the following statements are 'True' or 'False':** **1x6=6**

**(i) A work stoppage generally reduces the cost of production.**

**(ii) Depending on the need, the maintenance activity may be centralized or decentralized.**

**(iii) Piece wage system is a substitute for proper supervision.**

**(iv) Most suitable layout for continuous production is Matrix Layout.**

**(v) Addition of value to raw materials through application of technology is production.**

**(vi) Breakdown maintenance doesn't require use of standby machines.**

**Answer:**

**1. (a)**

(i) (A) Higher

(ii) (B) Forecasting

(iii) (B) Gantt Chart

(iv) (B) Value analysis

(v) (C) Product Mix

# Suggested Answer_Syl16_June2019_Paper_9

(vi) (A) Line efficiency

(vii) (B) Product Layout

(viii) (A) Method of Least Squares

(ix) (C) Every work center and the operation to be done at that work center

(x) (D) Loading, Scheduling and Assignment works.

**1. (b)**

A - (v) Project viability checking

B - (i) Crashing

C - (vi) Assembly Line

D - (iii) Plan Layout

E - (ii) Product design

F - (iv) Method Study

**1. (c)**

(i) False

(ii) True

(iii) False

(iv) False

(v) True

(vi) False

**Answer *any three* questions from the following: 16x3=48**

**2. (a) List down various activities lying under Production and Operations Management function.**

**(b) The present layout is shown in the figure. The manager of the department is intending to interchange the departments C and F in the present layout. The handling frequencies between the departments is given. All the departments are of the same size and configuration. The material handling cost per unit length travel between departments is same. What will be the effect of interchange of departments C and F in the layout?**

**6+10=16**

| | | |
|---|---|---|
| **A** | **C** | **E** |
| **B** | **D** | **F** |

| From / To | A | B | c | D | E | F |
|---|---|---|---|---|---|---|
| **A** | — | **0** | **80** | **150** | **60** | **10** |
| **B** | — | - | **90** | **0** | **90** | **110** |
| **C** | - | - | - | **40** | **0** | **5** |
| **D** | -- | - | - | - | **160** | **20** |
| **E** | — | - | — | — | — | **60** |
| **F** | - | - | - | - | - | - |

**Answer:**

**2. (a)** Various activities lying under Production and Operations Management functions:

(i) Location of facilities.

(ii) Plant layouts and Material Handling.

(iii) Product Design.

(iv) Process Design.

(v) Production Planning and Control.

(vi) Quality Control.

(vii) Materials Management.

(viii) Maintenance Management.

**(b)** (i) The distance matrix of the present layout:

| From / To | A | B | c | D | E | F |
|---|---|---|---|---|---|---|
| A | | 1 | 1 | 2 | 2 | 3 |
| B | | | 2 | 1 | 3 | 2 |
| C | | | | 1 | 1 | 2 |
| D | | | | | 2 | 1 |
| E | | | | | | 1 |
| F | | | | | | - |

(ii) Computation of total cost matrix (combining the inter-departmental material handling frequencies and distance matrix).

# Suggested Answer_Syl16_June2019_Paper_9

| From / To | A | B | c | D | E | F | Total |
|---|---|---|---|---|---|---|---|
| A | | 0 | 80 | 300 | 120 | 30 | 530 |
| B | | | 180 | 0 | 270 | 220 | 670 |
| C | | | | 40 | 0 | 10 | 50 |
| D | | | | | 320 | 20 | 340 |
| E | | | | | | 60 | 60 |
| F | | | | | | | – |
| Total | | | | | | | 1,650 |

If the departments are interchanged, the layout will be represented as shown below.

| | | |
|---|---|---|
| A | F | E |
| B | D | C |

(iii) The distance matrix and the cost matrix of the new layout are shown:

| From / To | A | B | c | D | E | F |
|---|---|---|---|---|---|---|
| A | | 1 | 3 | 2 | 2 | 1 |
| B | | | 2 | 1 | 3 | 2 |
| C | | | | 1 | 1 | 2 |
| D | | | | | 2 | 1 |
| E | | | | | | 1 |
| F | | | | | | - |

(iv) Total cost matrix for the modified layout.

| From / To | A | B | c | D | E | F | Total |
|---|---|---|---|---|---|---|---|
| A | | 0 | 240 | 300 | 120 | 10 | 670 |
| B | | | 180 | 0 | 270 | 220 | 670 |
| C | | | | 40 | 0 | 10 | 50 |
| D | | | | | 320 | 20 | 340 |
| E | | | | | | 60 | 60 |
| F | | | | | | | – |
| Total | | | | | | | 1,790 |

(v) Interpretation and conclusion: The interchange of departments C and F increases the total material handling cost. Thus, it is not a desirable modification.

# Suggested Answer_Syl16_June2019_Paper_9

**3. (a) Examine the following types of Process decisions:**

**(i) Job Shop Process**

**(ii) Project Process**

**(b) Describe the different types of Production Control. (3x2)+10=16**

**Answer:**

**3. (a)** Examination of the following types of Process decisions:

**(i) Job shop process:** It is used in job shops when a low volume of high-variety goods are needed. Processing is intermittent, each job requires somewhat different processing requirements. A job shop is characterised by high customisation (made to order), high flexibility of equipment and skilled labour and low volume. A tool and die shop is an example of job shop, where **job process** is carried out to produce one-of-a kind of tools. Firms having job shops often carry out job works for other firms. A job shop uses a flexible flow strategy, with resources organised around the process.

**(ii) Project process:** It is characterised by high degree of job customisation, the large scope for each project and need for substantial resources to complete the project. Examples of projects are building a shopping centre, a dam, a bridge, construction of a factory, hospital, developing a new product, publishing a new book etc. Projects tend to be complex, take a long time and consist of a large number of complex activities. Equipment flexibility and labour skills can range from low to high depending on the type of projects.

**(b)** Production control can be of six types:

**(i) Block control**

This type of control is most prominent in textiles and book and magazine printing. In these industries it is necessary to keep things separated and this is the fundamental reason why industries resort to block control.

**(ii) Flow control**

This type of control is commonly applied in industries like chemicals, petroleum, glass, and some areas of food manufacturing and processing. Once the production system is thoroughly designed, the production planning and control department controls the rate of flow of work into the system and checks it as it comes out of the system. But, under this method, routing and scheduling are done when the plant is laid out. That is to say, the production line which is established is well balanced and sequenced before production operations begin; this type of control is more prevalent in continuous production systems.

**(iii) Load control**

Load control is typically found wherever a particular bottleneck machine exists in the process of manufacturing.

**(iv) Order control**

The most, common type of production control is called order control. This type of control is commonly employed in companies with intermittent production systems, the so-called job-lot shops. Under this method, orders come into the shop for different quantities for different products. Therefore, production planning and control must be based, on the individual orders.

**(v) Special project control**

Special production control is necessary in certain projects like the construction of bridges, office buildings, schools, colleges, universities, hospitals and any other construction industries. Under this type of control, instead of having sets of elaborate forms for tooling and scheduling, a man or a group of men keeps in close contact with the work.

**(vi) Batch control**

Batch control is another important, type of production control which is frequently found
in the food processing industries.

**4. (a) A Project consists of four major jobs, for which four contractors have submitted tenders. The tender amounts, in thousands of Rupees, are given below:**

| Contractor | | Jobs | | |
|---|---|---|---|---|
| | A | B | C | D |
| 1 | 110 | 98 | 75 | 95 |
| 2 | 85 | 95 | 115 | 65 |
| 3 | 105 | 135 | 125 | 98 |
| 4 | 95 | 95 | 75 | 95 |

**Find the assignment, which minimizes the total cost of the Project. Each contractor has to be assigned one job.**

**(b) A Taxi operator is planning to open a computerised ticket counter in the center of the city, staffed by one ticket agent. It is estimated that requests for tickets and information will average 18 per hour, and requests will have a Poisson distribution.**

**Service time is assumed to be exponentially distributed. Previous experience with similar computerised operations suggests that mean service time should average about 2-5 minutes per request.**

**Determine each of the following:**

**(i) System utilization**

**(ii) Percentage of time the server (agent) will be idle.**

**(iii) The expected number of customers waiting to be served**

**(iv) The average time customers will spend in the system.** **8+(2x4)=16**

**Answer:**

**4. (a)**

The given problem is a standard minimization problem. Subtracting the minimum element of each row from all its elements in turn, the given problem reduces to:

| Contractor | Jobs | | | |
|---|---|---|---|---|
| | **A** | **B** | **C** | **D** |
| 1 | 35 | 23 | 0 | 20 |
| 2 | 20 | 30 | 50 | 0 |
| 3 | 7 | 37 | 27 | 0 |
| 4 | 20 | 20 | 0 | 20 |

Now subtract the minimum element of each column from all of its elements in turn. Draw the minimum number of lines, horizontal or vertical, so as to cover all zeros:

| Contractor | Jobs | | | |
|---|---|---|---|---|
| | **A** | **B** | **C** | **D** |
| 1 | 28 | 3 | 0 | 20 |
| 2 | 13 | 10 | 50 | 0 |
| 3 | 0 | 17 | 27 | 0 |
| 4 | 13 | 0 | 0 | 20 |

Since the minimum number of lines to cover all zeroes is equal to 4 (= order of the matrix), this matrix will give optimal solution. The optimal assignment is made in the matrix below:

| Contractor | Jobs | | | |
|---|---|---|---|---|
| | **A** | **B** | **C** | **D** |
| 1 | 28 | 3 | [0] | 20 |
| 2 | 13 | 10 | 50 | [0] |
| 3 | [0] | 17 | 27 | ~~0~~ |
| 4 | 13 | [0] | ~~0~~ | 20 |

The optimal assignment is:

| Contractors | Job | Cost (in thousands of Rupees) |
|---|---|---|
| 1 | C | 75 |
| 2 | D | 65 |
| 3 | A | 105 |
| 4 | B | 95 |

Hence, total minimum cost of Project will be ₹ 3,40,000.

**Answer:**

**4. (b)**

Arrival Rate = $\lambda$ = 18 customers per hour

Service Rate = $\mu$ = 1 / service time = (1 customer / 2.5 minutes) × 60 minutes per hour = 24 customers per hour

(i) System Utilisation = p = $\lambda$ M$\mu$ = 18 / (1× 24) = 0.75

(ii) Percentage idle time = 1 – p = 1– 0.75 = 0.25, or 25 percent

(iii) Expected no. of customers waiting to be served = Lq = $\lambda^2/\mu(\mu - \lambda)$

= $(18)^2$ / [24 × (24 – 18)] = 2.25 customers

(iv) Average time customers will spend in the system =

$W_s = (L_q / \lambda) + (1/\mu)$ = (2.25/18) + (1/24) = 0.1667 hrs = 10 minutes.

**5. (a) Table shows the time remaining (number of days until due date) and the work remaining (number of days still required to finish the work) for 5 jobs which were assigned the letters A to E as they arrived to the shop. Sequence these jobs by priority rules viz., (i) FCFS, (ii) EDD, (iii) LS, (iv) SPT and (v) LPT.**

| Job | Number of days until due date | Number of days of work remaining |
|---|---|---|
| **A** | **10** | **8** |
| **B** | **4** | **5** |
| **C** | **8** | **7** |
| **D** | **11** | **4** |
| **E** | **5** | **9** |

**(b) An electronic device components manufacturing company carries out the 'A' components testing for 2500 hours. A sample of 100 'A' components was put through this quality test during which two components failed. If the average usage of the electronic device by the customer is 5 hours/day and if 12,000 such devices were sold, then in one year how many 'A' components were expected to fail and what is the mean time between failures for these components? (2x5)+6=16**

**Answer:**

**5. (a)**

| Job | Number days until due date | Number of days of work remaining |
|---|---|---|
| A | 10 | 8 |
| B | 4 | 5 |
| C | 8 | 7 |
| D | 11 | 4 |
| E | 5 | 9 |

(i) FCFS (First come first served) : Since the jobs are assigned letters A to E as they arrived /to the shop, the sequence according to FCFS priority rule is A B C D E

(ii) EDD (Early due date job first) rule : Taking into account the number of days until due date, the sequence of jobs as per EDD rules is

| Job | B | E | C | A | D |
|---|---|---|---|---|---|
| No. of days until due date | 4 | 5 | 8 | 10 | 11 |

(iii) L.S. (Least slack) rule also called as Minimum slack rule.

Calculation of slack:

Slack = (Number of days until due dale ) - (Number of cays of work remaining)

| Job | No. of days until/due date | No. of days of work remaining | Slack (Days) |
|---|---|---|---|
| A | 10 | 8 | 10 – 8 = 2 |
| B | 4 | 5 | 4 – 5 = -1 |
| C | 8 | 7 | 8 – 7 = 1 |
| D | 11 | 4 | 11 – 4 = 7 |
| E | 5 | 9 | 5 – 9 = -4 |

Sequence :

| Job | E | B | C | A | D |
|---|---|---|---|---|---|
| Slack | -4 | -1 | 1 | 2 | 7 |

Here the jobs are sequenced in ascending order of magnitude of their respective slacks.

(iv) SPT (Shortest Processing Time job first) also referred as SOT (Shortest Operation time job First) rule or MINPRT (Minimum Processing time job first) rule. As per this rule, jobs are sequenced in ascending order of magnitude of their respective processing time.

Sequence :

| Job | D | B | C | A | E |
|---|---|---|---|---|---|
| Processing Time (Days) | 4 | 5 | 7 | 8 | 9 |

(v) LPT (Longest Processing time job first) also referred to as LOT (Longest operation time job first) rule.

As per this rule jobs are sequenced in descending order of magnitude of their respective processing times.

Sequence:

| Job | E | A | C | B | D |
|---|---|---|---|---|---|
| Processing Time (Days) | 9 | 8 | 7 | 5 | 4 |

**(b)** The total test time = (100 components) × 2500 hours = 250,000 component-hours.

There are two components which have failed and hence the total time is to be adjusted for the number of hours lost due to the failures during the testing.

The lost hours are computed as = (2×2500) / 2 = 2500 hours.

The assumption is made here is that each of the failed tubes have lasted an average of half of the test period.

Therefore, the test shows that there are two failures during (2,50,000 - 2500) = 2,47,500 component hours of testing.

During 365 days a year (four hours a day) for 12,000 components the number of expected failures = (2 × 12,000 × 365 × 5)/2,47,500 = 176.97 =177 components approximately.

Mean time between failures = 2,47,500 components hrs. of testing / 2 failures = 1,23,750 components hours per failure = 1,23,750 / (5/365) = 67.8 components year per failure.

# Suggested Answer_Syl16_June2019_Paper_9

## Section B

## Strategic Management

**6. Choose the correct answer: 1x6=6**

**(i) Offensive strategy is a strategy**

**(A) for small companies that consider offensive attacks in the market.**

**(B) for those companies that search for new inventory opportunities to create competitive advantage.**

**(C) for the market leader who should attack the competitor by introducing new products that make existing ones obsolete.**

**(D) for those companies who are strong in the market but not leaders and might capture a market share from the leader.**

**(ii) The BCG growth matrix is based on the two dimensions:**

**(A) Market Size and Market Share**

**(B) Market Size and Profit Margins**

**(C) Market Size and Competitive Intensity**

**(D) None of the above**

**(iii) For an entrepreneur**

**(A) Vision is before the mission.**

**(B) Mission is before the vision.**

**(C) Both are developed simultaneously.**

**(D) Vision or mission are un-important issues.**

**(iv) Benchmarking is**

**(A) the analytical tool to identify high cost activities based on the 'Pareto Analysis'.**

**(A) the search for industries best practices that lead to superior performance.**

**(B) the simulation of cost reduction schemes that help to build commitment and improvement of actions.**

**(B) the process of marketing and redesigning the way a typical company works.**

**(v) Strategic analysis is concerned with stating the position of the organisation in terms of**

**(A) Mission, choice of market segments, product selection, financial targets and external appraisal.**

**(B) Mission, goals, corporate appraisal, position audit and gap analysis.**

**(C) Mission, goals, identification of key competitors, SWOT and environmental appraisal.**

**(D) Mission, targeted ROI, manpower planning and position audit.**

**(vi) Intensity of competition is in low return industries.**

**(A) low**

**(B) non-existent**

**(C) high**

**(D) not important**

**Answer:**

**6.** Choose the correct answer:

(i) - (D) For those companies who are strong in the market but not leaders and might capture a market share from the leader.

(ii) - (D) None of the above

(iii) - (A) Vision is before the mission

(iv) - (B) The search for industries best practices that lead to superior performance.

(v) - (B) Mission, goals, corporate appraisal, position audit and gap analysis.

(vi) - (C) high.

**Answer *any two* questions from the following: 12x2=24**

**7. (a) What is a Company Mission? List the guidelines for formulation of 'mission' statement.**

**(b) Briefly describe the limitations of the BCG model. 8+4=12**

**Answer:**

**7. (a)** The mission is a broadly framed but enduring statement of company intent. It embodies the business philosophy of strategic decision makers; implies the image the company seeks to project; reflects the firm's self-concept; indicates the principal product or service areas and primary customer needs the company will attempt to satisfy. In short, the mission describes the product, market, and technological areas of emphasis for the business. And it does so in a way that reflects the values and priorities of strategic decision makers.

Guidelines for formulation of "mission" statement

- It should be based on existing business capabilities "Who we are and what we do?"
- It should follow the long term strategy principles

- Profit making should not be the only mission of organisation
- It should be logical extension of business existing capabilities
- It should clearly and precisely present the future orientation of business
- It should include achievable missions
- It should be stated in a form that it becomes the motivating force to every member of organisation
- Mission statement once formed shall be communicated to every member of organisations
- It should include interest of customers and society

**(b) Limitations of the BCG Model:**

(i) How do you define your market? Segmentation strategies can provide a niche. A niche is inevitably a low or restricted share of the market, yet it is the heart of a focus strategy.

Fimis can profit servicing small low-growth niches.

(ii) Market growth and market share are assumed to be reliable pointers for cash flow. This is often not true. High market share does not necessarily mean high profits, especially if a firm has high costs, or has bought market share by low pricing.

(iii) Relative market share amongst competitors is not necessarily an indication of their competitive strengths at any particular time. After all, market leaders are vulnerable.

(iv) The BCG model might become a self-fulfilling prophecy: Dogs which could be made profitable might simply be left to the rather than be resuscitated.

(v) It does not suggest any response to declining markets other than withdrawal: many firms can make money in 'sunset industries'.

(vi) It ignores the extent to which a firm which serves a number of markets can exploit production synergies.

(vii) It ignores the threat of substitute products.

# Suggested Answer_Syl16_June2019_Paper_9

**8. (a) State the basic distinctions between Strategic Management and Strategic Planning.**

**(b) State the various advantages and disadvantages of SBU structure. 6+6=12**

**Answer:**

**8. (a)** The basic differences between Strategic management and Strategic planning are as follows:

| **Strategic Management** | **Strategic Planning** |
|---|---|
| 1. It is focused on producing strategic results; new markets; new products; new technologies etc. | 1. It is focused on making optimal strategic decisions. |
| 2. It is management by results. | 2. It is management by plans. |
| 3. It is an organizational action process. | 3. It is an analytical process. |
| 4. It broadens focus to include psychological, sociological and political variables. | 4. It is focused on business, economic and technological variables. |
| 5. It is about choosing things to do and also about the people who will do them. | 5. It is about choosing things to do. |

**(b)** Various advantages and disadvantages of SBU structure:

**Advantages:**

(i) Promotes accountability since units' heads are responsible for individual SBU profitability

(ii) Career development opportunities are further higher in this structure

(iii) Allow better control of categories of products manufacturing, marketing and distributions

(iv) Helps to expand in different related and unrelated businesses.

**Disadvantages:**

(i) May provide inconsistent approach to tackle customers, etc., because each unit may work in it's own way to handle situations

(ii) High cost approach.

**9. Write short notes on *any three* of the following: 4x3=12**

**(a) Features of Human Resources Strategy**

**(b) McKinsey's 7-S Framework**

**(c) Principle of BPR**

**(d) Stages involved in Strategic Planning**

**Answer:**

**9. (a) Features of Human Resources Strategy**

The more important features which human resource strategy may bring to bear on the organisation are as follows:

**(i) Orientation of the members.** HRM strategy has to ensure that individuals employed in the organisation have necessary orientation so that the mission and objectives of the organisation are internalised by the members and they have a sense of identification with the values and culture of the organisation.

**(ii) Facilitation of organisational changes as and when called for.** The practices and procedures are required to be in conformity with the changing internal and external conditions. This is a vital role of HR strategy management.

**(iii) Coping with diversity of workforce.** Modem organisations with highly complex nature of jobs and processes generally have a highly diversified workforce differentiated in terms of age, sex, religion, professional and technical skills and educational background. To maintain a balanced workforce with harmonious relations and providing equitable incentives and rewards are aspects of HRM functions which can sustain an effective workforce. This is a responsibility of HR strategy managers.

**(iv) Maintaining competent and committed workforce in a competitive environment.** The intensity of market competition for enterprises has been growing fast with globalisation and liberaliation of economic policies. There are competitive strategies of low cost production and differentiation of products which may enable companies to secure a competitive edge. HRM has the responsibility of managing workforce so as to make it competent in ability as well as committed to organisational success.

**(v) Development of core competency.** An enterprise succeeds in achieving its strategic objectives mainly on the basis of capabilities in the technical, marketing or human skills in areas of crucial importance. These are known as core competencies of the organisation which are unique internal strengths not possessed by competitors. HRM is required to undertake building up of core competency by the organisation as to secure dynamic leadership in the product market.

**(vi) Empowered workforce as an active resource.** HR strategy is best managed when the members of an organisation are individually in control of their work and are able to realise their potentials with empowerment to take relevant decisions on their own. This is likely to secure enduring performance based achievements.

**(vii) Appropriate work culture and ethical norms.** No organisation can get the best contribution from its members unless individuals develop a liking for challenging jobs and follow the ethical norms of the organisation functionally. This may require redesigning of jobs and work processes as well as developing trust and confidence among individuals and work groups, as also emphasizing intrinsic

motivation for improving performance. HRM encompasses creation of an appropriate work culture on the above lines.

**(b) McKinsey's 7-S Framework**

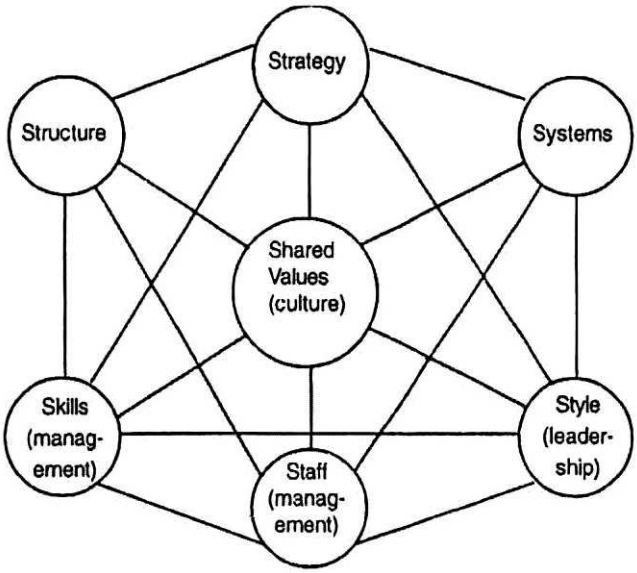


Strategy is dependent on many variables - Internal as well as external. All factors are interrelated.

- *Strategy:* A set of decisions and actions aimed at gaining a sustainable competitive advantage.
- *Structure:* The organisation chart and associated information that shows who reports to whom and how tasks are both divided and integrated.
- *Systems:* The flow of activities involved in the daily operation of a business, including its core processes and its support systems.
- *Style:* How managers collectively spend their time and attention and how they use symbolic behaviour. How management acts is more important than what management says.
- *Staff:* How companies develop employees and shape basic values.
- *Shared Values:* Commonly held beliefs, mindsets and assumptions that shape how an organisation behaves— its corporate culture.
- *Skills:* An organisation's dominant capabilities and competencies.

**(c) Principle of BPR**

BPR is achieving dramatic performance improvements through radical change in organizational processes, re-architecting) of business and management processes. It involves the redrawing of organizational boundaries, the reconsideration of jobs, tasks, and skills. This occurs with the creation and the use of models. Whether those be physical models, mathematical, computer or structural models, engineers build and analyze models to predict the performance of designs or to understand the behavior of devices. More specifically, BPR is defined as the use of scientific methods, models and tools to bring about the radical restructuring of an enterprise that result in significant improvements in performance.

Re-design, re-tooling and re-orchestrating form the key components of BPR that are essential for an organization to focus on the outcome that it needs to achieve. The outcome pursued should be an ambitious outcome (as for instance, are a 24 hour delivery to any customer anywhere in the world, approval of mortgage loans within 60 minutes of application, or ability to have on-line access to a patient's medical records no matter where they are in any major city in the world). These types of visionary goals require rethinking the way most organizations do business, careful redesign. They will additionally need very sophisticated supporting information systems and a transformation from a traditional organizational structure to a network type organization.

**(d) Stages involved in Strategic Planning:**

**Stage I: Strategic Option Generations**

At this stage, a variety of alternatives are considered, relating to the firm's product and markets, its competitors and so forth. Examples of strategies might be:

(i) increase market share

(ii) penetration into international market

(iii) concentration on core competencies

(iv) acquisition or expansion etc.

**Stage II - Strategic Options Evaluation**

Each option is then examined on its merits.

(i) does it increase existing strengths?

(ii) does it alleviate existing weaknesses?

(iii) is it suitable for the firm's existing position?

(iv) is it acceptable to stakeholders?

**Stage III - Strategic Selection**

It involves choosing between the alternative strategies. This process is strongly influenced by the values of the managers in selecting the strategies.

# INTERMEDIATE EXAMINATION

## GROUP - II

## (SYLLABUS 2016)

## SUGGESTED ANSWERS TO QUESTIONS

## DECEMBER - 2019

### Paper - 9 : OPERATIONS MANAGEMENT & STRATEGIC MANAGEMENT

**Time Allowed : 3 Hours** **Full Marks : 100**

**The figures in the margin on the right side indicate full marks.**

**This paper contains two Sections.**

**Both Sections are compulsory, subject to instructions provided against each.**

**All workings must form part of your answer.**

**Assumptions, if any, must be clearly indicated.**

**Section – A**

**Operations Management**

**1. (a) Choose the correct answer: 1×10=10**

**(i) Conversion of inputs into outputs is known as**

**(A) Application of technology**

**(B) Manufacturing products**

**(C) Product**

**(D) Operation management**

**(ii) Which of the following is NOT the Plant Layout Principle?**

**(A) Principle of sequence**

**(B) Principle of usage**

**(C) Principle of maximum travel**

**(D) Principle of minimum investment**

**(iii) Number of product varieties that can be manufactured in Mass production is**

**(A) one only.**

**(B) few varieties in large volume.**

**(C) two only.**

**(D) large varieties in small volumes.**

**(iv) Scheduling shows.**

**(A) which resource should do which job and when.**

**(B) total cost of production.**

**(C) total material cost.**

**(D) the flow line of materials.**

**(v) Which one of the following standards is associated with the "Quality Management and Quality System Elements-Guidelines"?**

**(A) ISO 9001**

**(B) ISO 9002**

**(C) ISO 9003**

**(D) ISO 9004**

**(vi) In a network diagram, the activity that must be completed prior to the start of an activity is called as**

**(A) Successor activity**

**(B) Predecessor activity**

**(C) Concurrent activity**

**(D) Dummy activity**

**(vii) Identify which one of the following is NOT the objective of the maintenance:**

**(A) To keep all production facilities and allied facilities in an optimum working condition.**

**(B) To ensure specified accuracy to products and time schedule of delivery to customers.**

**(C) To keep the down time of the machine at the maximum.**

**(D) To keep the production cycle within the stipulated range.**

**(viii) One of the important charts used in Programme control is**

**(A) Gantt chart**

**(B) Material chart**

**(C) Distribution chart**

**(D) Maintenance chart**

**(ix) The act of going round the production shop to note down the progress of work and feedback the information is known as**

**(A) Dispatching**

**(B) Routing**

**(C) Follow up**

**(D) Trip card**

**(x) With reference to the characteristics of a good product design, which one of the following is referred to "the ease of manufacture with minimum cost"?**

**(A) Reliability**

**(B) Productibility**

**(C) Specification**

**(D) Simplification**

**(b) Match Column A with Column B: 1x6=6**

| Column A | Column B |
|---|---|
| (A) Use of minimal amounts of resources to produce a high volume of high quality goods with some variety | (i) KAIZEN |
| (B) Arranging and grouping of machines which are meant to produce goods | (ii) Network |
| (C) The extent to which a firm will produce goods or provide services in-house or go for outsourcing | (iii) Monte Carlo Method |
| (D) A given problem is solved by simulating the original data with random number generators | (iv) Lean Production |
| (E) The principle of continuous improvement | (v) Make or Buy Decisions |
| (F) A graphical representation of all the activities and events arranged in a logical and sequential order | (vi) Layout |

**(c) State whether the following statements are 'True' or 'False': 1×6=6**

**(i) The full form of the word MRP in the term "MRP II" is Material Requirements Planning.**

**(ii) Strikes and lock-out are controllable factors affecting Capacity Planning.**

**(iii) Queue Discipline refers to the order in which customers are processed.**

**(iv) ISO Standards are reviewed every four years and revised if needed.**

**(v) The CPM has the advantage of decreasing completion times by probably spending more money.**

**(vi) The rotable spares are spare parts which are required regularly and in substantial number.**

**Answer:**

**1. (a)**

(i) (D) Operation management

(ii) (C) Principle of maximum travel

(iii) (B) few varieties in large volume.

(iv) (A) which resource should do which job and when.

(v) (D) ISO 9004

(vi) (B) Predecessor activity

(vii) (C) To keep the down time of the machine at the maximum.

(viii) (A) Gantt chart

(ix) (C) Follow up

(x) (B) Productibility

**1. (b)**

(A) (iv) Lean Production

(B) (vi) Layout

(C) (v) Make or Buy Decisions

(D) (iii) Monte Carlo Method

(E) (i) KAIZEN

(F) (ii) Network

**1. (c)**

(i) False

(ii) False

(iii) True

(iv) False

(v) True

(vi) False

**Answer any three questions from the following: 16x3=48**

**2. (a) Enumerate the characteristics of a modern operations function. 7**

**(b) A firm has four work centres, A, B, C and D, in series with individual capacities in units per day shown in the figure below: 3×3=9**

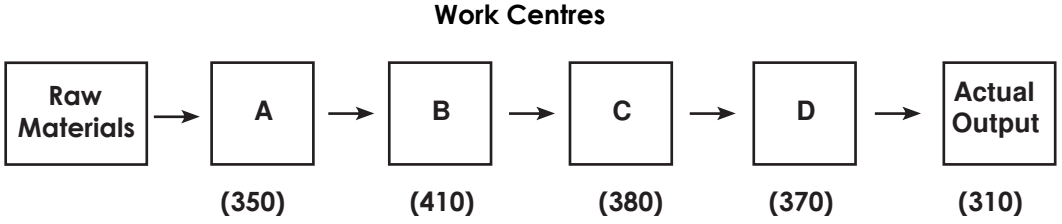


**(i) Identify the bottle neck centre.**

**(ii) Determine the system capacity.**

**(iii) Determine the system efficiency.**

**Answer:**

**2. (a)** Today's production system is characterised by the following features:

1. **Manufacturing as Competitive Advantage:** Unlike the past, today plants have excess capacities, competition is mounting and firms look and competitive edge and firms intend to exploit the potential. Total Quality Management (TQM), Time-Based Competition, Business Process Re-engineering (BPRE), Just-in-Time (JIT), Focused Factory, Flexible Manufacturing Systems (FMS), Computer Integrated Manufacturing (CIM), and The Virtual Corporation are but only some techniques which the companies are employing to gain competitive advantage.
2. **Services Orientation:** Service sector is gaining greater relevance these days. The production system, therefore, needs to be organised keeping in mind the peculiar requirements of the service component. The entire manufacturing needs to be geared to serve (i) intangible and perishable nature of the services, (ii) constant interaction with clients or customers, (iii) small volumes of production to serve local markets, and (iv) need to locate facilities to serve local markets. There is increased presence of professionals on the production, instead of technicians and engineers.
3. **Disappearance of Smokestacks:** Protective labour legislation, environmental movement and gradual emergence of knowledge based organisations have brought total transformation in the production system. Today's factories are aesthetically designed and built, environment friendly - in fact, they are homes away from homes. Going to factory every day is no more excruciating experience, it is like holidaying at a scenic spot.
4. **Small has Become Beautiful:** E. F. Schumacher, in his famous book Small is Beautiful, opposed giant organisations and increased specialisation. He advocated, instead, intermediate technology based on smaller working units, community ownership, and regional workplaces utilising local labour and resources. Businessmen, all over the world, did not believe in Schumacher's philosophy. Inspired by economies of scale, industrialists went in for huge organisations and mass production systems.

**(b)** A firm has four work centres.

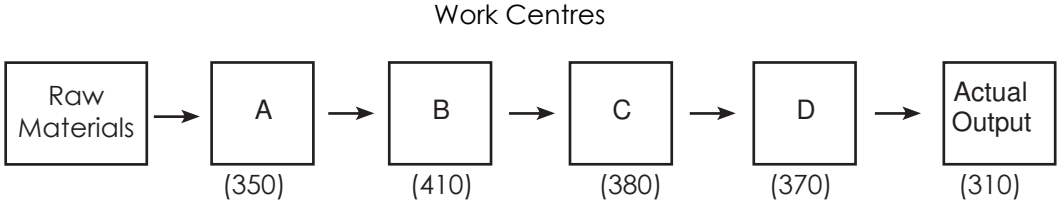


(i) the bottle neck centre is the work centre having the minimum capacity. Hence, work centre 'A' is the bottleneck centre.

(ii) System capacity is the maximum units that are possible to produce in the system as a whole. Hence, system capacity is the capacity of the bottle neck centre i.e., 350 units.

(iii) System efficiency = Actual output/ System capacity = (310/350)×100 (i.e. maximum possible output) = 88.57%

**3. (a) What do you understand by Process Design and Selection?** **3+5=8**

**(b) The following data is available for a manufacturing unit:**

| | |
|---|---|
| **No. of operators** | **16** |
| **Daily working hours** | **8** |
| **No. of days per month** | **25** |
| **Standard production per month** | **400 units** |
| **Standard labour hours per units** | **8** |

**The following information was obtained for June 2019:**

| | |
|---|---|
| **Man days lost due to absenteeism** | **36** |
| **Units produced** | **300** |
| **Idle time** | **260 man hours** |

**Find the following:** **2×4=8**

**(i) Per cent absenteeism**

**(ii) Efficiency of utilization of labour**

**(iii) Productive efficiency of labour**

**(iv) Overall productivity of labour in terms of units produced per man per month.**

**Answer:**

**3. (a)**

Process Design is concerned with the overall sequences of operations required to achieve the product specifications. It specifies the type of work stations to be used, the machines and equipment necessary to carry out the operations. The sequence of operations is determined by (i) the nature of the product, (ii) the materials used, (iii) the quantities to be produced, and (iv) the existing physical layout of the plant.

The process design is concerned with the following:

(i) Characteristics of the product or service offered to the customers.

(ii) Expected volume of output.

(iii) Kinds of equipments and machines available in the firm.

(iv) Whether equipments and machines should be of special purpose or general purpose.

(v) Cost of equipments and machines needed.

(vi) Kind of labour skills available, amount of labour available and their wage rates.

(vii) Expenditure to be incurred for manufacturing processes.

(viii) Whether the process should be capital-intensive or labour-intensive.

(ix) Make or buy decision.

(x) Method of handling materials economically.

**3. (b)**

(i) Percent absenteeism = [(No. of Hrs. lost in absenteeism in a month)/(Total working hours per month)] x 100 = (36 x 8)/ (16 x 25 x 8) = 0.09 x 100 = 9%

(ii) Efficiency of utilization of labour = [(Standard labour hour to produce 300 units) / (Total labour hour)] x 100 = [(300 x 8) / (16 x 25 x 8)] x 100 =75%

(iii) Determination of Productive efficiency of labour:-

Standard time required to produce 300 units = 300 x 8 = 2400 labour hours. In June 2019, man hours lost = 36 x 8 = 288

In June 2019, Idle time (in hours) = 260 Total loss of time = 548 hrs.

Productive hours available in June 2019 = 16 x 25 x 8 = 3,200 hrs. Less, Total loss of time: 548 hrs.

Actual Labour hours = 3200 - 548 = 2,652 hrs

Productive efficiency of labour = [(Standard Labour hours) / (Actual labour hours)] x 100

= (2400/2652) x 100

= 90.497 %

= 90.50 % (approx.)

(iv) Overall productivity of labour in terms of units produced per man per month: 16 men produce 400 units, Standard labour productivity = 400/16 = 25 units In June 2019, overall productivity = 300/16 = 18.75 units

i.e. productivity falls by [(25-18.75)/25] x 100 = 25%

**4. (a) Find the Initial Feasible Solution by North-West Corner method.** **8**

| | W1 | W2 | W3 | W4 | Supplies |
|---|---|---|---|---|---|
| F1 | 10 | 12 | 14 | 18 | 210 |
| F2 | 25 | 19 | 21 | 30 | 330 |
| F3 | 18 | 16 | 11 | 23 | 430 |
| F4 | 28 | 34 | 17 | 15 | 290 |
| Demand | 270 | 390 | 320 | 280 | |

**Wj = Warehouse**

**Fi = Factory**

**Cell entries are unit costs in ₹**

**(b) A retailer is dealing with FMCG items. The table, as given below, presents the past data of demand per week in hundred kgs with frequency.**

| Demand/Week | 0 | 5 | 10 | 15 | 20 | 25 |
|---|---|---|---|---|---|---|
| Frequency | 3 | 7 | 5 | 11 | 18 | 6 |

**Using the following sequence of the random numbers, generate the demand for the next 10 weeks. Also find out the average demand per week. 6+2=8**

| Random Nos. | 27 | 43 | 50 | 11 | 16 | 36 |
|---|---|---|---|---|---|---|
| | 58 | 64 | 51 | 38 | 18 | 47 |

**Answer:**

**4. (a)** The Initial Feasible Solution

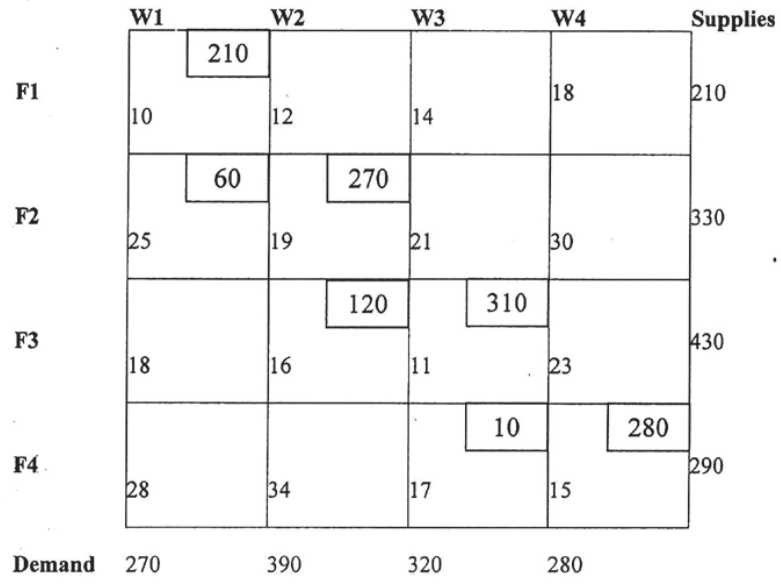


Wj = Warehouse

Fi = Factory

Cell entries are unit costs in ₹

**(b)**

| Random No. Range Table for Demand | | | | |
|---|---|---|---|---|
| **Demand per week** | **Frequency (f)** | **Probability (p=f/∑f)** | **Cumulative Probability** | **Range of Random numbers** |
| 0 | 3 | 0.06 | 0.06 | 0-5 |
| 5 | 7 | 0.14 | 0.20 | 6-19 |
| 10 | 5 | 0.10 | 0.30 | 20-29 |
| 15 | 11 | 0.22 | 0.52 | 30-51 |
| 20 | 18 | 0.36 | 0.88 | 52-87 |
| 25 | 6 | 0.12 | 1.00 | 88-99 |
| | ∑f=50 | 1.00 | | |

| Simulated Values for next 10 weeks | | |
|---|---|---|
| **Weeks** | **Random nos.** | **Demand** |
| 1 | 27 | 10 |
| 2 | 43 | 15 |
| 3 | 50 | 15 |
| 4 | 11 | 05 |
| 5 | 16 | 05 |
| 6 | 36 | 15 |
| 7 | 58 | 20 |
| 8 | 64 | 20 |
| 9 | 51 | 15 |
| 10 | 38 | 15 |
| **Total:** | **-** | **135** |

Average weekly demand is = 135/10=13.5

**5. (a) Draw the network for the following activities and find the Critical Path and Total duration of the project. 6**

| Activity | Predecessor | Duration (months) |
|---|---|---|
| **A** | **-** | **2** |
| **B** | **-** | **3** |
| **C** | **-** | **5** |
| **D** | **A** | **4** |
| **E** | **B** | **1** |
| **F** | **B** | **5** |
| **G** | **C** | **8** |
| **H** | **D** | **1** |
| **I** | **E** | **2** |
| **J** | **F, G** | **4** |
| **K** | **H, I** | **3** |
| **L** | **K, J** | **2** |

**(b) RST Company has kept records of breakdown of its machines for 300 days work year as shown below:**

| No. of Breakdown | Frequency in days |
|---|---|
| 0 | 50 |
| 1 | 140 |
| 2 | 60 |
| 3 | 30 |
| 4 | 20 |
| Total | 300 |

**The company estimates that each breakdown costs ₹600 and is considering adopting a preventive maintenance program which would cost ₹ 250 per day and limit the number of breakdown to an average of one per day. What is the expected annual savings from preventive maintenance program? 10**

**Answer:**

**5. (a)**

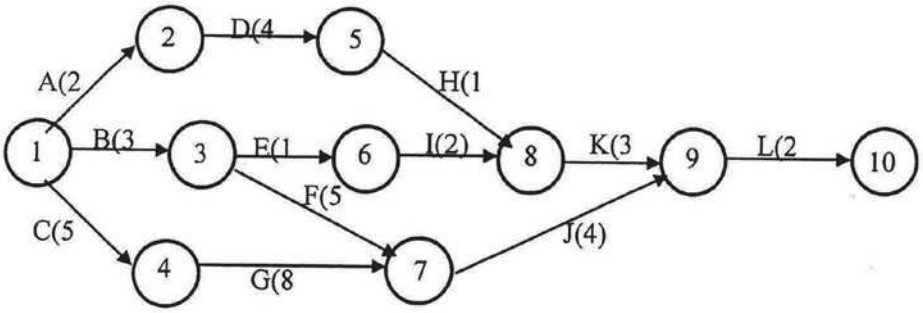


Calculation of Critical path:

(i) A-D-H-K-L = 2+4+1+3+2 = 12

(ii) B-E-I-K-L = 3+1+2+3+2 = 11

(iii) B-F-J-L = 3+5+4+2 = 14

(iv) C-G-J-L- = 5+8+4+2 = 19 = Critical Path (Project duration)

**(b)** Step-1:

| No. of Breakdowns (X) | Frequency of breakdowns in days; i.e. f(x) | Probability distribution of break downs; i.e. p(x) | Expected value of breakdown X p(x) |
|---|---|---|---|
| 0 | 50 | 50/300 = 0.167 | Nil |
| 1 | 140 | 140/300 = 0.466 | 0.466 |
| 2 | 60 | 60/300 = 0.200 | 0.400 |

| | | | |
|---|---|---|---|
| 3 | 30 | 30/300 = 0.100 | 0.300 |
| 4 | 20 | 20/300 = 0.067 | 0.268 |
| Total: | 300 | 1.000 | 1.434 |

Step - 2 :

Total no. of breakdowns per day = 1.434

Cost of breakdown per day = 1.434×600 = 860.4/-

Cost of preventive maintenance program per day = ₹ 250 + 600 = 850/- Expected annual savings from the preventive maintenance program = (860.4 – 850) × 300 = 10.4 × 300 = ₹ 3,120

**Section - B**

**Strategic Management**

**6. Choose the correct answer: 1x6=6**

**(i) Which of the following statements can be closely related with the Mission?**

**(A) It includes definition of products & services the organization provides.**

**(B) It specifies management policies towards customers and societies.**

**(C) It provides a roadmap to company's future.**

**(D) It indicates the kind that company management is trying to create for future.**

**(ii) Portfolio Analysis is a term used**

**(A) to identify what strategy is needed to maintain a strong position or improve a weak one.**

**(B) to find out a best alternative out of various alternatives available.**

**(C) to analyse products and business by market share and market growth.**

**(D) to make managers more adaptable to unforeseen changes.**

**(iii) Which one of the following is NOT a role of Marketing?**

**(A) It helps in sustaining and improving the existing levels of employment.**

**(B) It helps in the economic growth of a country.**

**(C) It helps in the discovery of entrepreneurial talent.**

**(D) It diminishes potential aggregate demand and thus reduces the size of the market**

**(iv) Which one of the following in NOT the benefit of a Vision?**

**(A) It helps in the creation of common identity and a shared sense of purpose.**

**(B) It fosters risk taking and experimentation.**

**(C) It fosters short-term thinking.**

**(D) It represents integrity.**

**(v) The competitive position of a company's SBU or product line can NOT be classified as one of the following:**

**(A) Dominant**

**(B) Strong**

**(C) Favourable**

**(D) Volatile**

**(vi) The best test of a successful Strategy Implementation is**

**(A) whether the strategies and procedures are observed in the strategy supportive fashion.**

**(B) whether the structure is well-matched to strategy.**

**(C) whether actual organizational performance matches or exceeds the targets spelt out in the strategic plan.**

**(D) whether it is made after the strategy is formulated, so that it is supportive to the strategy.**

**Answer:**

(i) (A) It includes definition of products & services the organization provides.

(ii) (A) to identify what strategy is needed to maintain a strong position or improve a weak one.

(iii) (D) It diminishes potential aggregate demand and thus reduces the size of the market.

(iv) (C) It fosters short-term thinking.

(v) (D) Volatile

(vi) (C) whether actual organizational performance matches or exceeds the targets spelt out in the strategic plan.

**Answer any two questions from the following: 12x2=24**

**7. (a) Define the term 'strategy' and list the characteristics of a strategic decision. 2+6=8**

**(b) What do you understand by Product Development Strategy? 4**

**Answer:**

**7. (a)**

Strategy may be defined as the direction and scope of a organisation over the long term, which achieves advantage for the organisation through the configuration of resources within a changing environment and to fulfill stakeholder expectations.

The definition of strategy encompasses a comprehensive master approach that states how the corporation will achieve its mission and objectives. It maximizes competitive advantage and minimizes competitive disadvantage.

The characteristics of a strategic decision/strategy:

(i) Strategy is likely to be concerned with long-term direction of an organisation.

(ii) Strategic decisions are normally about trying to achieve some advantage for the organisation over competition.

(iii) Strategy is likely to be concerned with the scope of the organisation's activities.

(iv) Strategy can be seen as matching the resources and activities to the environment in which it operates.

(v) Strategy can be seen as stretching an organisation's resources and competences to create new opportunities or to capitalise on them.

(vi) Strategies may require major resource changes for an organisation.

(vii) Strategic decisions are likely to affect operational decisions.

(viii) The strategy of an organisation is affected not only by environmental factors and resource availability but also by the values and expectations of those who have power in and around the organisation.

**7. (b)**

Product Development Strategy involves extending the product range available to the firm's existing markets. These products may be obtained by:

(i) investment in the research and development of additional products;

(ii) acquisition of rights to produce someone else's product;

(iii) buying-in the product and ₹badging' it;

(iv) joint development with owners of another product who need access to the firm's distribution channels or brands.

The critical factor to the success of this strategy is the profitability of the customer group for which the products are being developed. Also the firm's present competitive advantages in serving the market must confer on to the new good. These can include:

(i) customer information that allows accurate targeting;

(ii) established distribution channels;

(iii) a brand which can be credibly applied to the new product.

**8. (a) What do you mean by Contingency Plans? Illustrate some contingency plans commonly established by firms. 1+5=6**

**(b) What are the three most important characteristics of SBU? List down major reasons of using SBU approach. 3+3=6**

**Answer:**

**8. (a) Contingency Plans:**

Contingency plans can be defined as alternative plans that can be put into effect if certain key events do not occur as expected.

Some contingency plans commonly established by firms:

1. If a major competitor withdraws from particular markets as intelligence reports indicate, what actions should our firm take?
2. If our sales objectives are not reached, what actions should our firm take to avoid profit losses?
3. If demand for our new product exceeds plans, what actions should our firm take to meet the higher demand?

4. If certain disasters occur—such as loss of computer capabilities; a hostile takeover attempt; loss of patent protection; or destruction of manufacturing facilities because of earthquakes, tornadoes, or hurricanes — what actions should our firm take?
5. If a new technological advancement makes our new product obsolete sooner than expected, what actions should our firm take?

**(b)** Three most important characteristics of SBU:

- It is a single business or a collection of related businesses which offer scope for independent planning and which might feasibly stand-alone from the rest of the organisation.
- Has its own set of competitors.
- Has a manager who has responsibility for strategic planning and profit performance, and who has control of profit-influencing factors.

**Major reasons of using SBU approach :**

- A scientific method of grouping the businesses of a multi-business corporation which helps the firm in strategic planning.
- An improvement over the geographical grouping of businesses and strategic planning based on locational units.
- An SBU is a grouping of related businesses that can be taken up for strategic planning distinct from the rest of the businesses.
- Grouping the businesses on SBU lines helps the firm in strategic planning by removing the ambiguity and confusion generally seen in grouping businesses,
- Each SBU is a separate business from the strategic planning standpoint. In the basic factors, viz., mission, objectives, competition and strategy-one SBU will be distinct from another.
- Each SBU will have its own distinct set of competitors and its own distinct strategy.
- Each SBU will have a CEO. He will be responsible for strategic planning for the SBU and its profit performance; he will also have control over most of the factors affecting the profit of the SBU.

**9. Write short notes on any three of the following: 4x3=12**

**(a) Name the steps involved in the formulation of production strategy.**

**(b) Write a brief note on 'Behaviour Control' aspect of Strategic Control System.**

**(c) What are the various types of firms/organizations where BPR can be applied?**

**(d) What are the various approaches in Strategic Planning?**

**Answer:**

**9. (a) Steps involved in the formulation of production strategy**

(i) Study the overall corporate plan and define the objectives.

(ii) Analyse the present production operations and the present and future environment.

(iii) Review sales - forecast and marketing.

(iv) Make strategic decisions for production.

**(b) 'Behaviour Control' aspect of Strategic Control System**

The establishment of a comprehensive system of rules and procedures to direct the actions or behaviour of divisions, functions and individuals is called behaviour control. The main purpose of having behaviour control is not to specify goals but to standardise the way of reaching them. It is felt that if rules are standardised then outcomes are predictable. It is of utmost importance that the management reviews behaviour controls over time. The rules that have been established tend to increase over time leading to inflexibility to react to the changing environment thereby adversely affecting the organisation's competitive advantage.

**(c) Types of firms/organizations where BPR can be applied**

BPR could by implemented to all firms (manufacturing firms, retailers, services, etc.) and public organizations that satisfy the following criteria:

- Minimum Number of employees: 20 (at least 4 in management positions).
- Strong management commitment to new ways of working and innovation.
- Well formed IT infrastructure.

Business Process Reengineering could be applied to companies that confront problems such as the following:

- High operational costs
- Low quality offered to customers
- High level of "bottleneck" processes at pick seasons
- Poor performance of middle level managers
- Inappropriate distribution of resources and jobs in order to achieve performance, etc.

**(d) Approaches in Strategic Planning**

There are three approaches that can be adopted to strategic planning:

(i) A top-down process, in which managers are given targets to achieve which they pass on down the line.

(ii) A bottom-up process, in which functional and line managers in conjunction with their staff submit plans, targets and budgets for approval by higher authority.

(iii) An iterative process, which involves both the top-down and bottom-up setting of targets. There is a to-and-from movement between different levels until agreement is reached. However, this agreement will have to be consistent with the overall mission, objectives and priorities and will have to be made within the context of the financial resources available to the organization. The iterative approach, which involves the maximum number of people, is the one most likely to deliver worthwhile and acceptable strategic plans.

# Support us by
# checking out our social handles

*Visit our website:* https://www.buddingcma.in

[Kindly register to get all the updates instantly]

*Following on Instagram:*

Account Name: BUDDING_CMA.POSITIVITY

https://instagram.com/budding_cma.positivity?igshid=3d0y3ravpjey

*Join us on Telegram:*

Channel Name: Budding CMA

https://t.me/buddingcma

Thank you for all the SUPPORT